Advanced Material & Devices Characterization Workshop

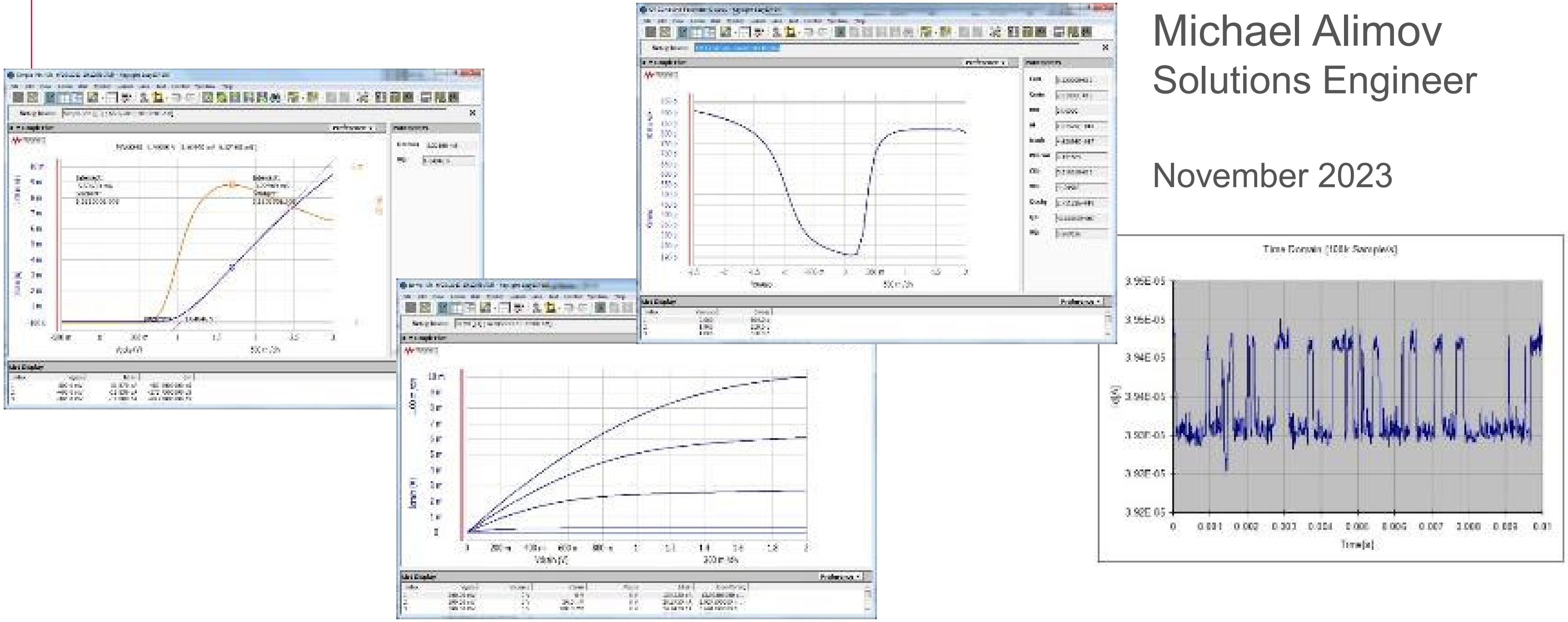

Michael Alimov
Solutions Engineer

November 2023

KEYSIGHT TECHNOLOGIES

Agenda for Today

- Material & Device Measurement Overview
- Current/Voltage Measurement Basics
- Capacitance Measurement
- Fast and Fast Pulsed IV Measurement
- Review & Summary

Material & Device Measurement Overview

Materials Science & Engineering Impacts Many Areas

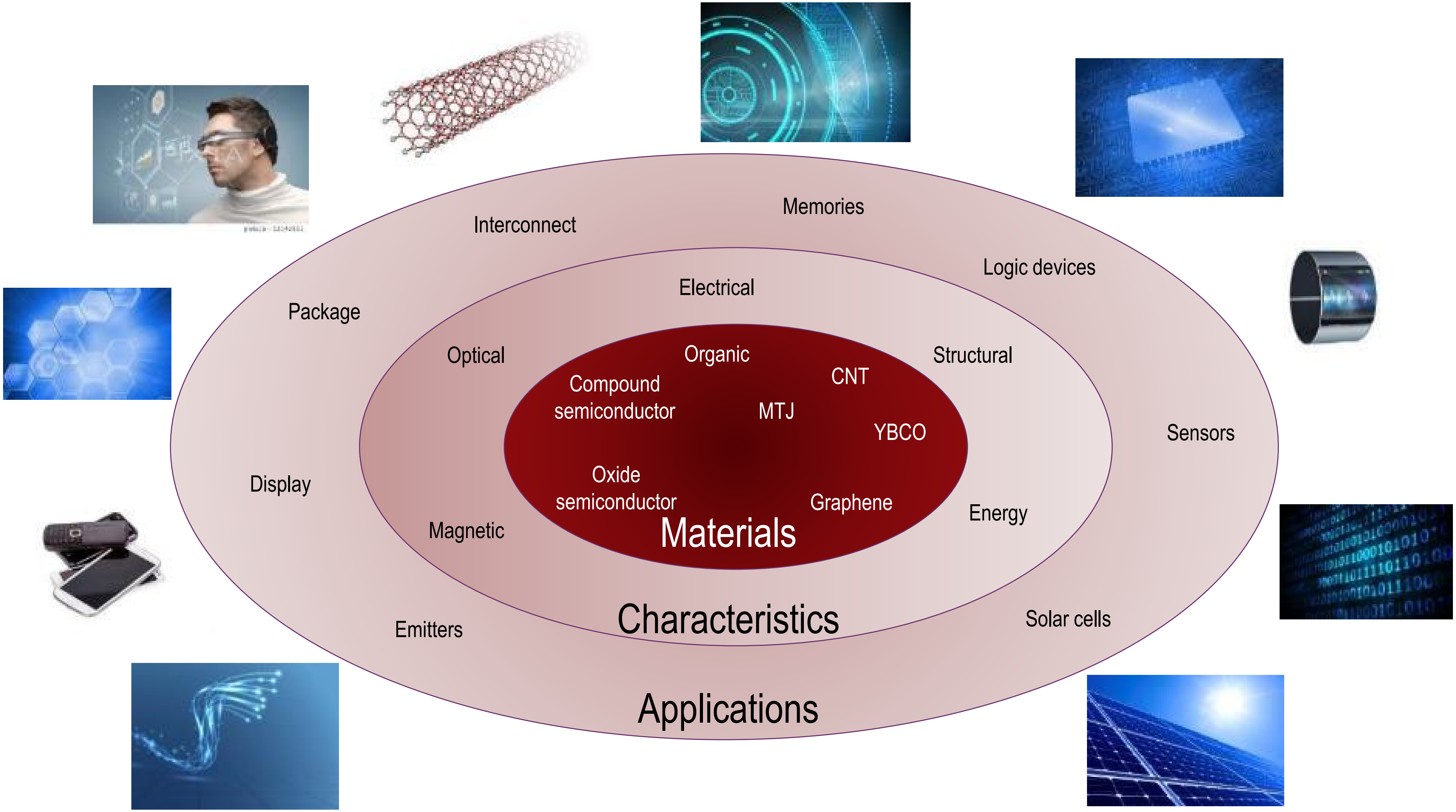

Organic
Compound semiconductor
CNT
MTJ
YBCO
Oxide semiconductor
Graphene
Materials

Electrical
Optical
Structural
Magnetic
Energy
Characteristics

Interconnect
Memories
Logic devices
Package
Sensors
Display
Emitters
Solar cells
Applications

Current – Voltage (IV) Measurement

Objectives

To measure the non-linear characteristics of materials and active devices

IV measurement method

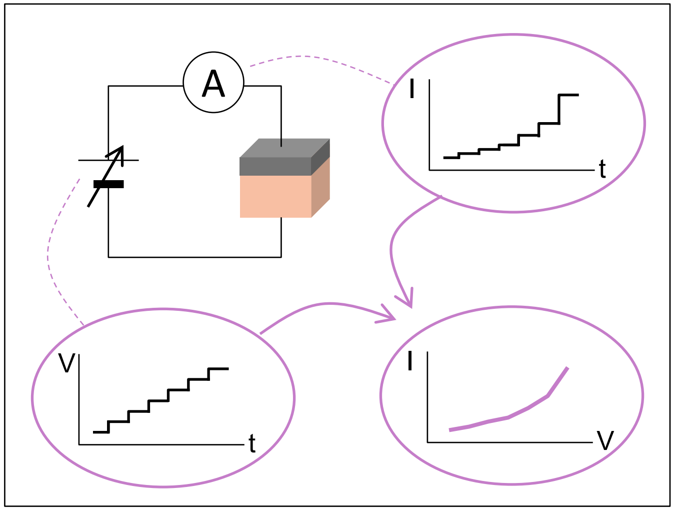

- IV curves provide deep insights into material properties
- IV curves also provide information on devices such as Field Effect Transistors (FETs) constructed from semiconductor materials. In this case characterization requires multiple voltage/current sources and multiple ammeters/voltmeters.

Measurement challenges:

- Need broad current and voltage ranges to cover all materials and applications
- Many materials require equipment capable of measuring ultra-low signal levels
- Insulating materials require very high voltages and low current measurement capability
- Sources and meters need to be well synchronized

Pulsed IV Measurement

Objectives

To measure IV characteristics while avoiding material self-heating effects

Pulsed IV measurement method

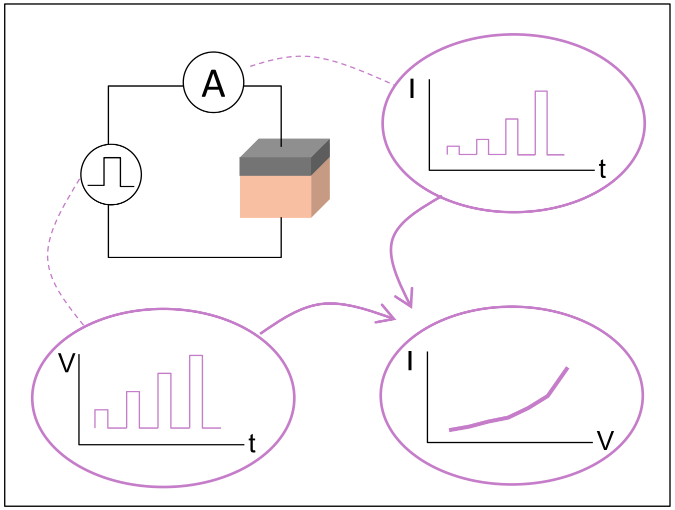

- Currents induce self-heating in materials (the Joule self-heating effect). Therefore, short pulse widths with long duty cycles are necessary to accurately characterize many materials and devices.
- Shrinking device geometries also increase the need pulsed IV measurement since smaller devices are more strongly impacted by self-heating.

Measurement challenges:

- Narrow pulse widths in the sub-microsecond level are necessary for some materials
- Precise control over pulse widths, period, leading/trailing edges and voltage/current levels is important for detailed characterization
- In conjunction with pulsed measurement, many materials require equipment capable of measuring ultra-low signal levels
- Sources and meters need to be well synchronized.

Resistivity/Conductivity Measurement

Objectives

To measure conductivity / resistivity

Resistivity measurement method

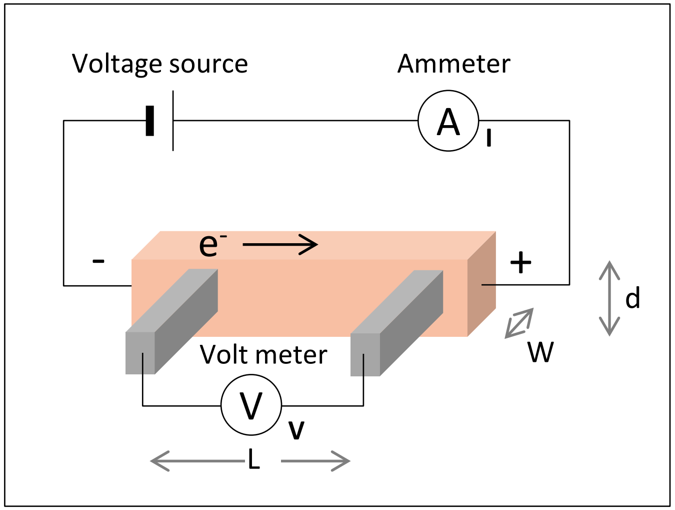

- Resistivity or conductivity measurement is fundamental to the characterization of electrical materials

Volume resistivity and conductivity calculation

ρ (Resistivity) = **V** / **I** * W * d / L

σ (Conductivity) = 1 / ρ

Sheet resistivity calculation

Rs = ρ / d

Measurement challenges:

- Many materials require equipment capable of measuring ultra-low signal levels
- Very high voltages and low current measurement capability are necessary to evaluate insulation properties

Four Point Probe Measurement

Objectives

To measure conductivity / resistivity of semiconductor materials

Four point measurement method

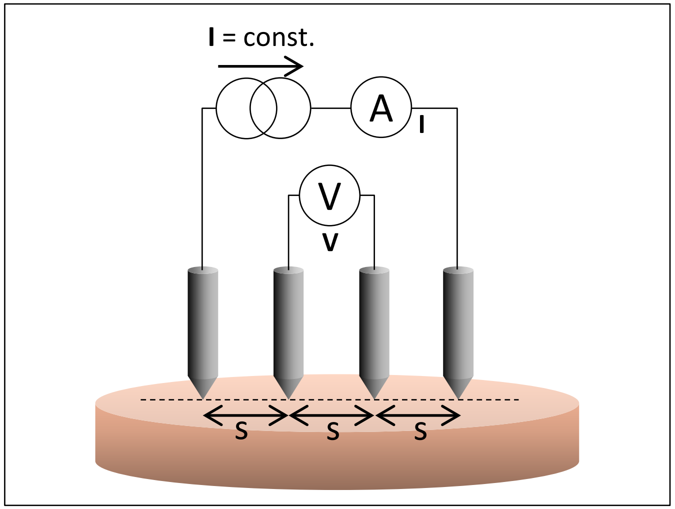

- The four point probe (aka Kelvin) measurement technique is well established for semiconductor materials and devices.

ρ (Resistivity) = **V** / **I** * c

Note: The “c” factor is a geometry dependent correction factor that is explained in Appendix A.

Measurement challenges:

- Many materials require equipment capable of measuring ultra-low signal levels
- An accurate current source is necessary
- To avoid changing the resistivity, the applied current must not heat up the material being tested
- Need to prevent extreme surface potential induced surface band bending
- Need “Goldilocks” probe material solid enough to provide a good Ohmic contact but soft enough so as not to damage the surface.

Van der Pauw Measurement

Objectives

To measure the resistivity of irregularly shaped flat samples.

Van der Pauw measurement method

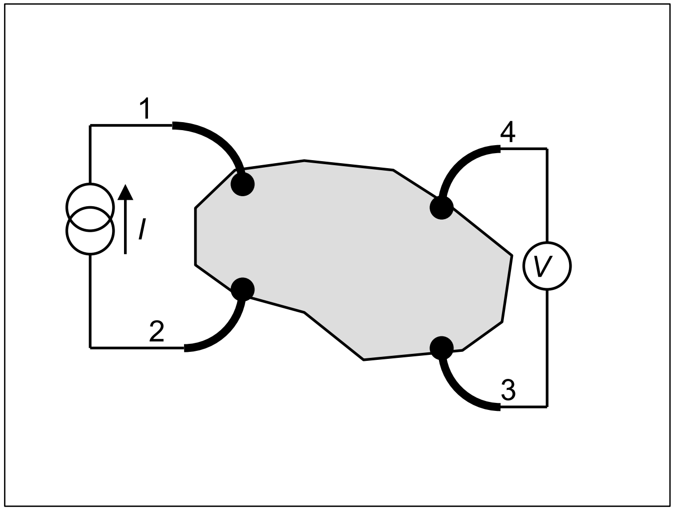

- A Van der Pauw measurement can be performed on any irregularly shaped flat sample if the following conditions are met.
  - The contacts are at the perimeter of the sample and are sufficiently small
  - The sample is uniformly thick
  - The sample does not contain isolated holes.

$$\rho = \frac{\pi d}{\ln(2)} \frac{\left(R_{12,34} + R_{23,41}\right)}{2} F$$

Where F is a function for the ration Rr=$R_{12,34}/R_{23,41}$ satisfying:

$$R_{12,34} = \frac{V_{34}}{I_{12}} \qquad \frac{R_r - 1}{R_r + 1} = \frac{F}{\ln(2)} \operatorname{arccosh}\left(\frac{\exp[\ln(2)/F]}{2}\right)$$

Measurement challenges:

- Many materials require equipment capable of measuring ultra-low signal levels
- To avoid changing the resistivity, the applied current must not heat up the material being tested
- Need “Goldilocks” probe material solid enough to provide a good Ohmic contact but soft enough so as not to damage the surface.

Time Domain I/V Measurement

Objectives

To measure changes to a material's characteristics over time or a material's response to a signal or stress

Time domain I or V measurement method

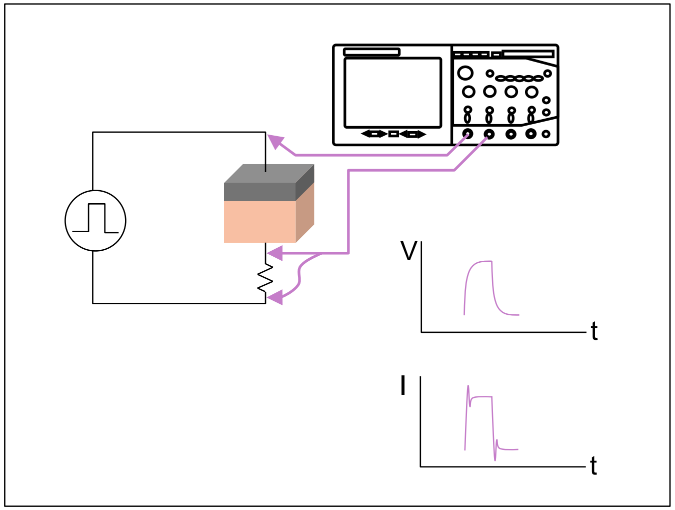

- Signal response over time is affected by many material properties such as interface traps, stray capacitance, internal resistance, etc. Therefore, carefully measuring response over time provides powerful insights into these material properties.
- Response to stress over time is crucial to understanding material reliability

Measurement challenges:

- Shunt resistor adds some voltage drop that detracts from accurate characterization
- Fast sampling rates are necessary to capture transient material changes; however, achieving both speed and accuracy is difficult. For example, while oscilloscope can measure very fast signals they do not have enough current/voltage measurement resolution for material characterization

Capacitance – Voltage (CV) Measurement

Objectives

To measure the charge related properties of a material

Capacitance measurement method

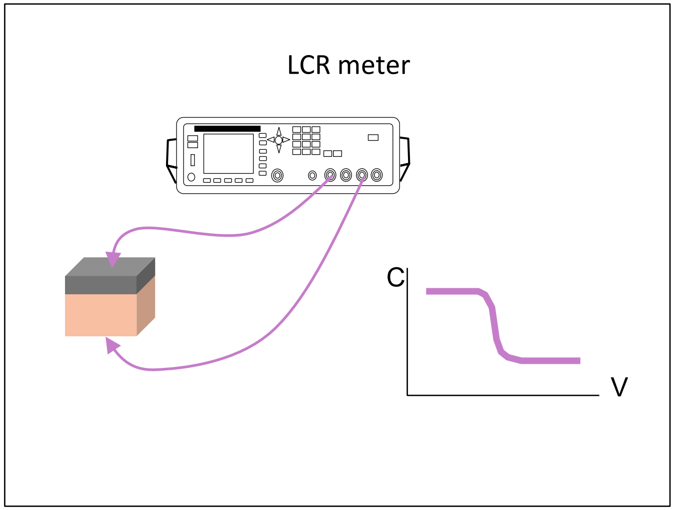

- Capacitance measurement is used to characterize charge related properties of semiconductor materials.
- It can be used to derive many key parameters such as carrier density, doping profile, impurity distribution and insulation layer thickness

Measurement challenges:

- Many materials require equipment capable of measuring ultra-low signal levels
- A thorough knowledge of capacitance measurement theory necessary to prevent measurement errors
- Some materials require higher DC bias voltages than the typical LCR meter can provide
- When measuring a sample on a wafer prober, the chuck capacitance needs to be taken into account to prevent measurement errors.

Quasi-Static CV (QSCV) Measurement

Objectives

To measure material interface state related properties

Capacitance measurement method

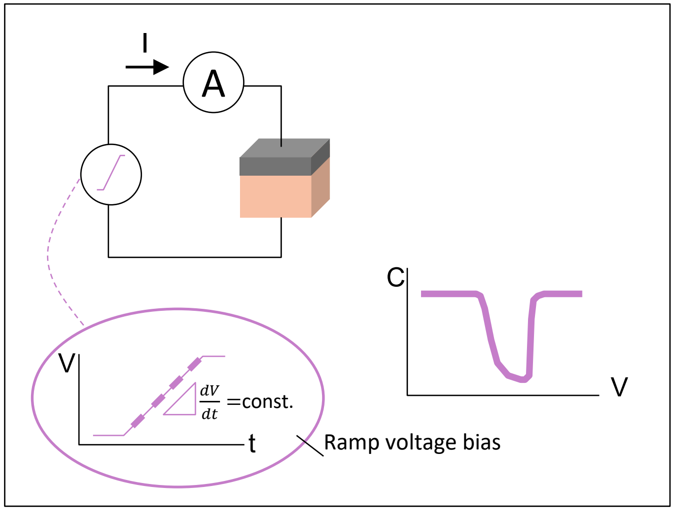

- Quasi-static CV is used to evaluate the quantity of charge trapped in the interface states of MIS (Metal-Insulator-Semiconductor) structures

$$C(V) = \frac{I(V)}{\frac{dV}{dt}}$$

Measurement challenges:

- Difficult to make accurate measurements if large leakage currents are present, which is a common issue in the early stages of materials development
- Synchronization of the ramp voltage source and the ammeter.

Hall Effect Measurement

Objectives

To measure the Hall voltage (V_H), from which majority carrier concentrations (p, n), material type and mobility (μ) can be derived

Hall measurement method

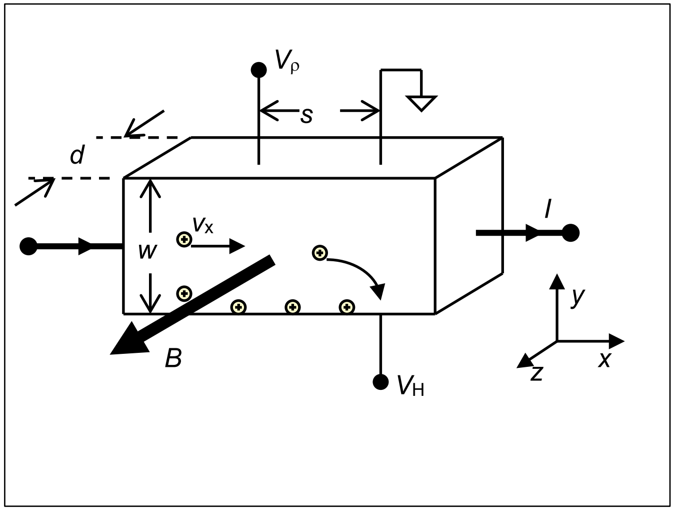

- Hall measurement can be performed on the same sample used for Van der Pauw measurement.
- A magnetic field applied to a conductor in a direction perpendicular to the current flow produces an electric field perpendicular to the magnetic field and current.
- The Hall voltage (V_H) can be expressed as follows.

$$V_H = \frac{1}{pqd} IB$$

- If V_H is known then p (the carrier concentration for p-type semiconductors) can be calculated using other known parameters.
- The RH (Hall constant) is defined as 1/pq for p-type and -1/nq for n-type. The sign depends on the carrier type. Thus, the Hall effect can be used to determine the dominant carrier type of an unknown semiconductor sample.
- Once the carrier concentration is known, the carrier mobility can be calculated using the following formula (where r comes from a Van der Pauw measurement).

$$\mu_H = \frac{1}{pq\rho}$$

Measurement challenges:

- Many materials require equipment capable of measuring ultra-low signal levels
- Need “Goldilocks” probe material solid enough to provide a good Ohmic contact but soft enough so as not to damage the surface.

Time of Flight Measurement

Objectives

To measure minority carrier mobility

Time of flight measurement method

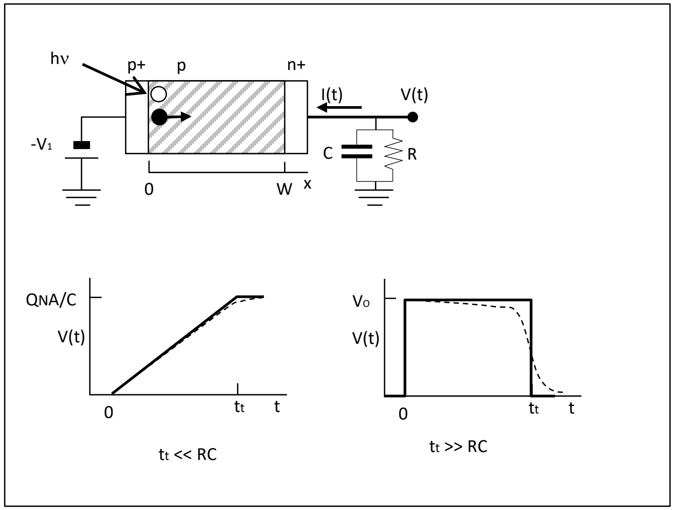

- The time of flight measurement method determines the time it takes minority carriers (primarily generated by light) to travel from one side of the sample to the other.
- Using this time measurement it is possible to determine the minority carrier velocity.
- Using the minority carrier velocity the minority carrier mobility can be calculated as:

$$\mu = \frac{v}{E} = \frac{W}{E * t_t}$$

Measurement challenges:

- Need very good current and voltage measurement resolution to detect the carriers and determine the time of flight
- Synchronization with the light (UV) source

Charge Pumping Measurement

Objectives

To measure the trap density at a semiconductor/insulator interface

Charge pumping measurement method

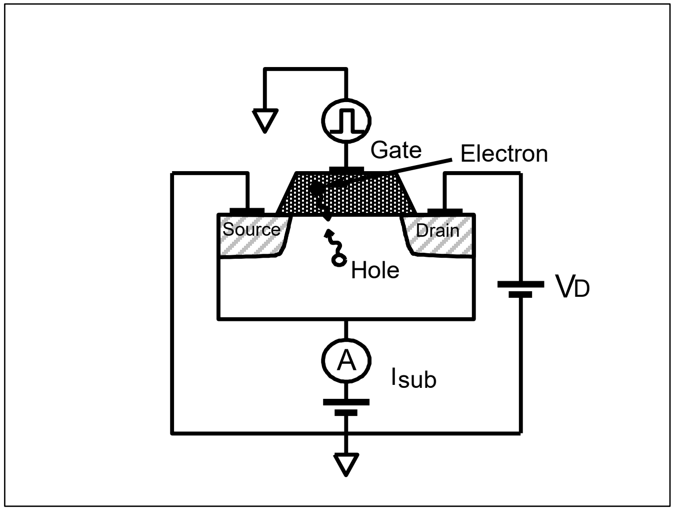

- A pulse train (in various shapes such as square, triangular, trapezoidal, sinusoidal or tri-level) is applied to a MOSFET structure and the resulting charge pumping current is measured at the substrate.

Square Pulse Train Case:

$$N_{IT} = \frac{I_{cp}}{q * f * A_g}$$

N_{IT}: Interface trap charge density (cm^{-2})
I_{cp}: Charge pumping current (A)
q: Electron charge (C)
f: Pump frequency
Ag: Channel area of transistor (cm^{-2})

Triangular Pulse Train Case:

$$D_{IT} = \frac{I_{cp}}{q * f * A_g * \Delta E}$$

D_{IT}: Interface trap charge density (cm^{-2}eV^{-1})
ΔE: Difference between the inversion Fermi level and the accumulation Fermi level
Other parameters same as above.

Measurement challenges:

- Charge pumping current (Icp) are typically small and require sub-pA level current measurement capability.
- Control over pulse width, level, leading/trailing edges, and period is necessary

AC Impedance Spectroscopy

Objectives

To measure the impedance of an electrochemical system versus frequency

AC impedance spectroscopy measurement method

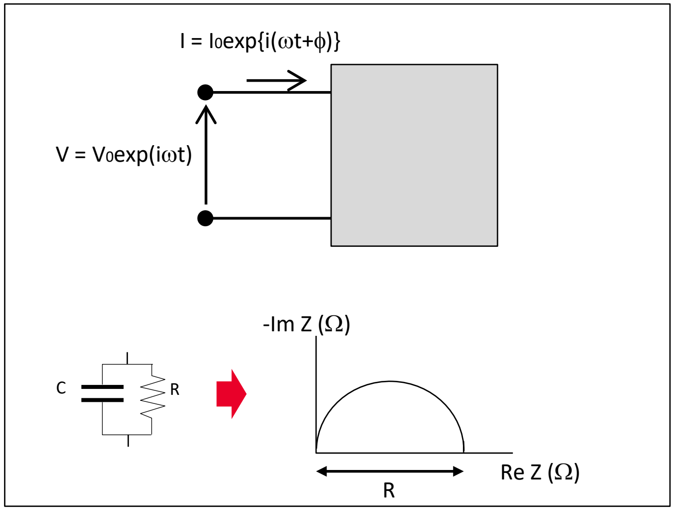

- Apply a small sinusoidal signal to a material and measure the response current. Impedance can be calculated from Ohm’s law (Z = V/I). The impedance can then plotted on the complex plane, which is a representation of the material’s or device’s equivalent circuit.
- The peak of the differential susceptance (DB) vs. frequency gives the carrier transit time. Therefore, mobility (m) can also be derived from this measurement.
- Trap distribution can also be calculated from the impedance measurement.

Measurement challenges

- Ultra low signal level measurement capability is necessary for many materials
- Need “Goldilocks” probe material solid enough to provide a good Ohmic contact but soft enough so as not to damage the surface.

Temperature Dependency Measurement

Objectives

To measure electrical material properties across temperature

Temperature dependency measurement method

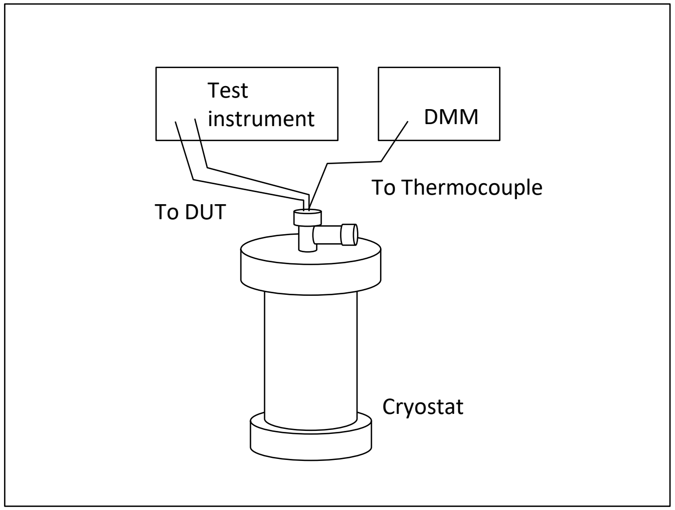

- Temperature has a large effect on a material's characteristics because it changes the kinetic behavior of its constituent atoms or molecules and it alters the binding energy of the constituent particles which can cause phase transitions.

Measurement challenges:

- Long measurement times
- Many materials require equipment capable of measuring ultra-low signal levels

Reliability Testing

Objectives

To measure the durability of a material to an applied stress

Concept of reliability measurement

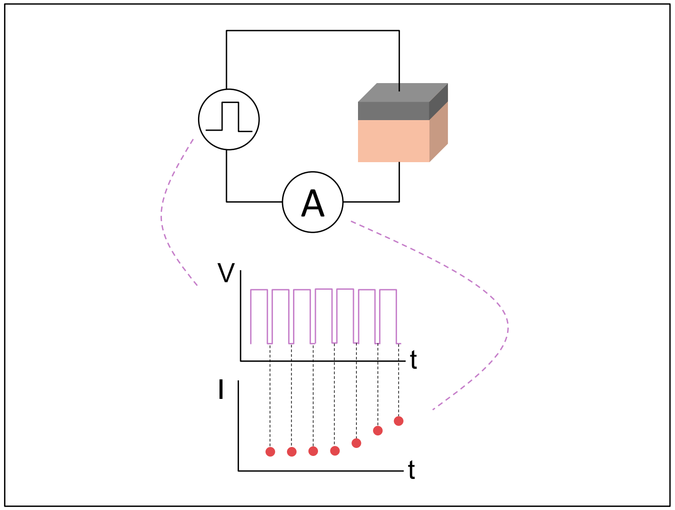

- There are a wide variety of reliability tests. The basic concept is to continuously apply stress to a material or device and simultaneously monitor behavior changes over time.
- Some reliability tests intentionally apply high stresses to accelerate the failure mechanism.

Measurement challenges:

- Long measurement times. Need the ability to measure multiple devices in parallel to shorten the test times.
- Synchronization between the stress source(s) and meters
- The ability to apply accurate stresses in current and/or voltage is necessary
- Many materials require equipment capable of measuring ultra-low signal levels

Summary of Material Testing Challenges

The following summarizes the most common material testing challenges:

- Accurate measurement at ultra low signal levels
- Broad current and voltage range required
- The ability to source both voltage and current
- Fast pulsing with control over the pulse waveform
- Fast sampling speeds to reveal transient characteristics
- Material / device probing with good near-Ohmic contacts
- Delicate measurements that are prone to measurement error
- Synchronization of measurement resources
- Reliability and temperature dependent measurements take a long time

Keysight Precision Measurement Products

Device Characterization

B1500A Device Analyzer

- Wide and versatile measurement coverage
  - Current: 0.1 fA -1 A
  - Voltage: 0.2 µV - 200V
  - Capacitance: 1 kHz – 5 MHz (@ 100V)
  - Pulse:100 ns, Transient IV: 5ns sampling
- Intuitive GUI based EasyEXPERT with over 300 furnished application tests

Precision I-V

B2900A Series Source/Measure Units (SMUs)

- Source up to ±210 V and ±3 A (DC)/±10.5 A (Pulsed)
- Measure down to 10 fA and 100 nV

B2960A Low Noise Power Source

- 10 µV(rms) noise floor

B2980A Femto/Picoammeter & Electrometer

- Measure down to 0.01 fA and up to 10 PΩ

High Power

B1505A Power Device Analyzer / Curve Tracer

- Wide Coverage: 10 kV / 1500A
- High Accuracy (sub-mΩ, sub-pA)
- Scalable and upgradable platform

B1506A Power Device Analyzer for Circuit Design

- One click to obtain all device parameters for power circuit design (Ron, BV, Vth, Ciss, Coss, Crss, etc)
- Rg, Qg measurement and power loss evaluation
- Thermal Test (-50℃ to +250℃)
- Up to 3kV / 1500A

KEYSIGHT
TECHNOLOGIES

Current/Voltage Measurement Basics

What is a Source/Measure Unit?

Simplified equivalent circuit (2-wire measurements):

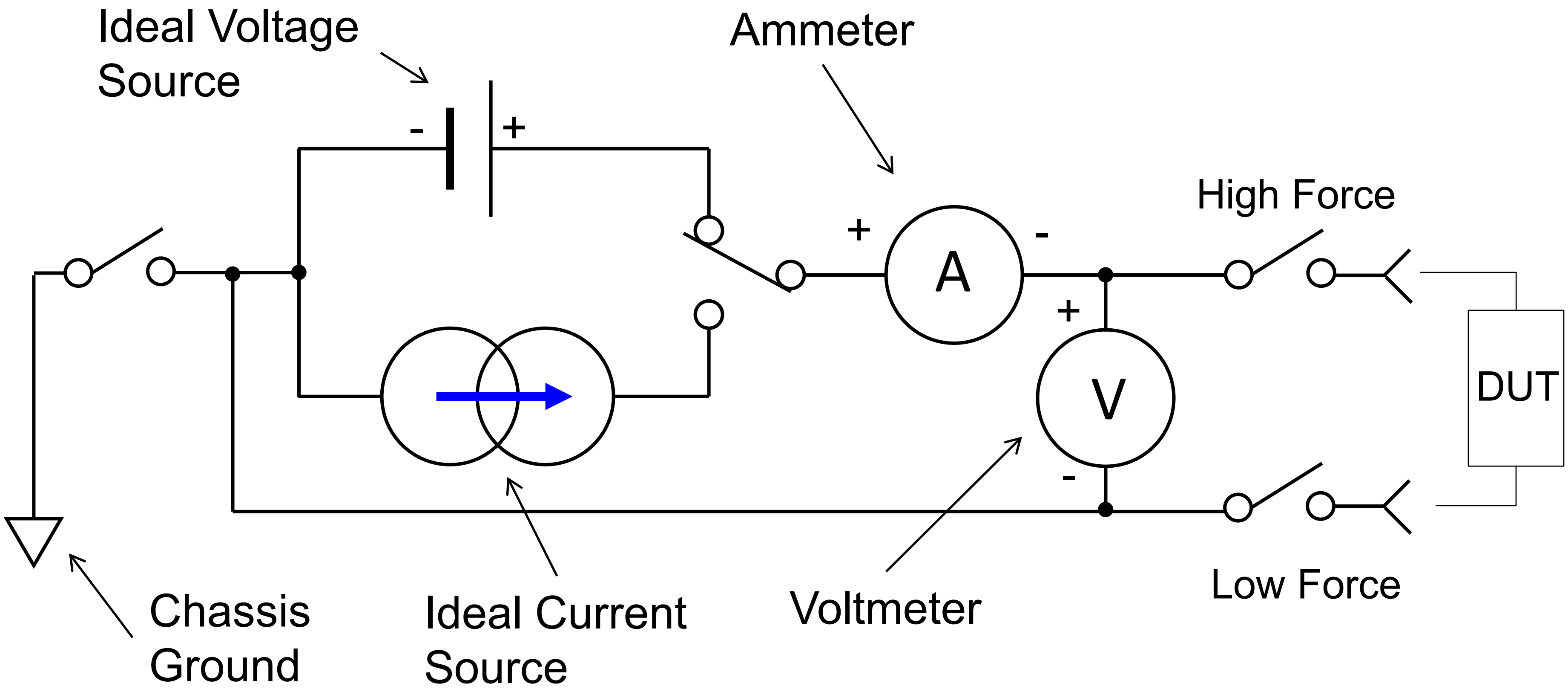

Note: The tight integration of these measurement resources yields better accuracy and faster measurement than would an equivalent collection of separate instruments.

Demo: Making a Basic 2-terminal Measurement

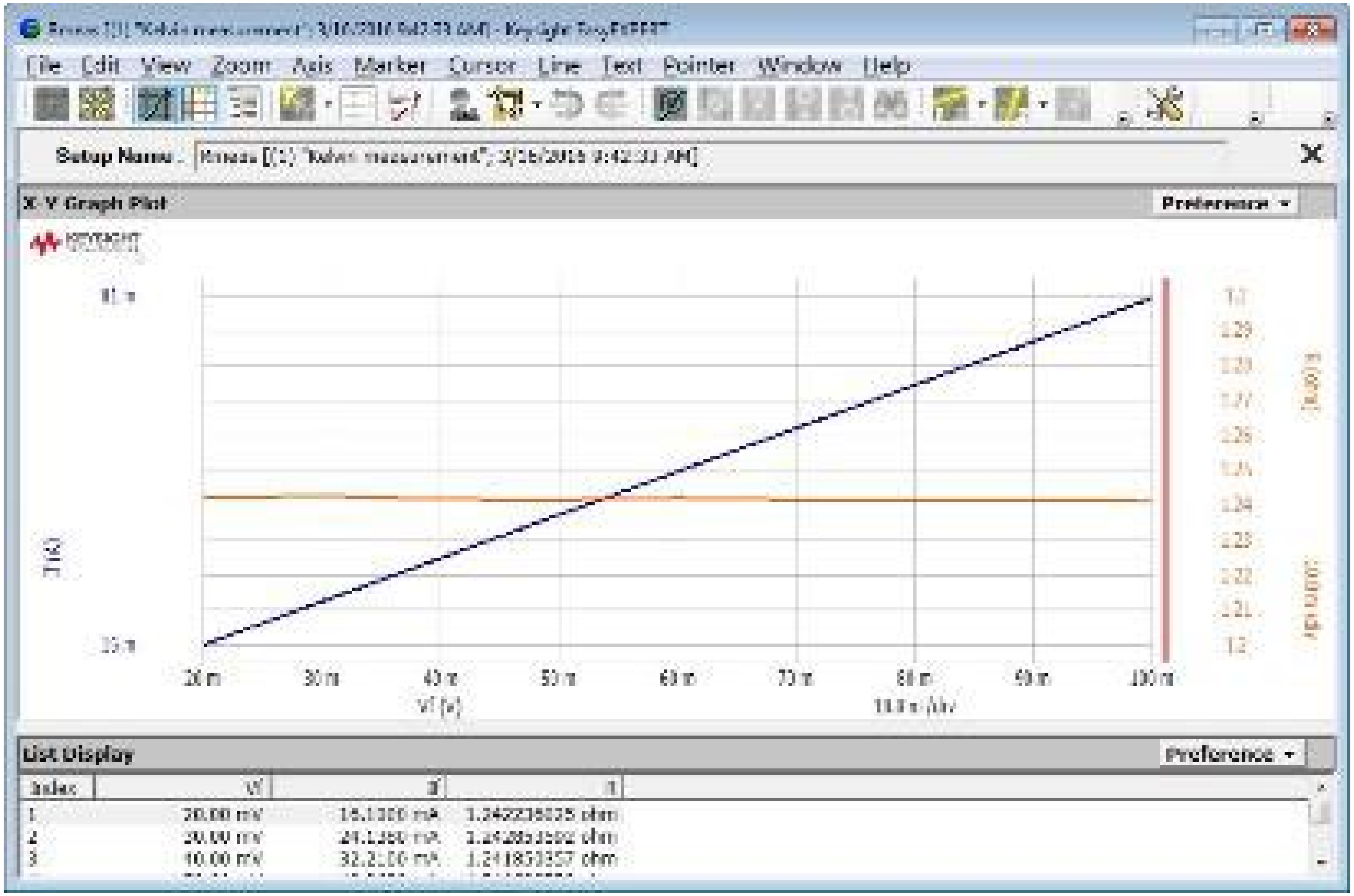

Setup Name: Kneas [(1) "Kelvin measurement", 3/15/2015 9:42:33 AM]

Index	V	I	R
1	20.00 mV	16.1000 mA	1.242238025 ohm
2	30.00 mV	24.1360 mA	1.242[illegible] ohm
3	40.00 mV	32.2100 mA	1.241853357 ohm

Making correct connections: 2-wire (non-Kelvin)

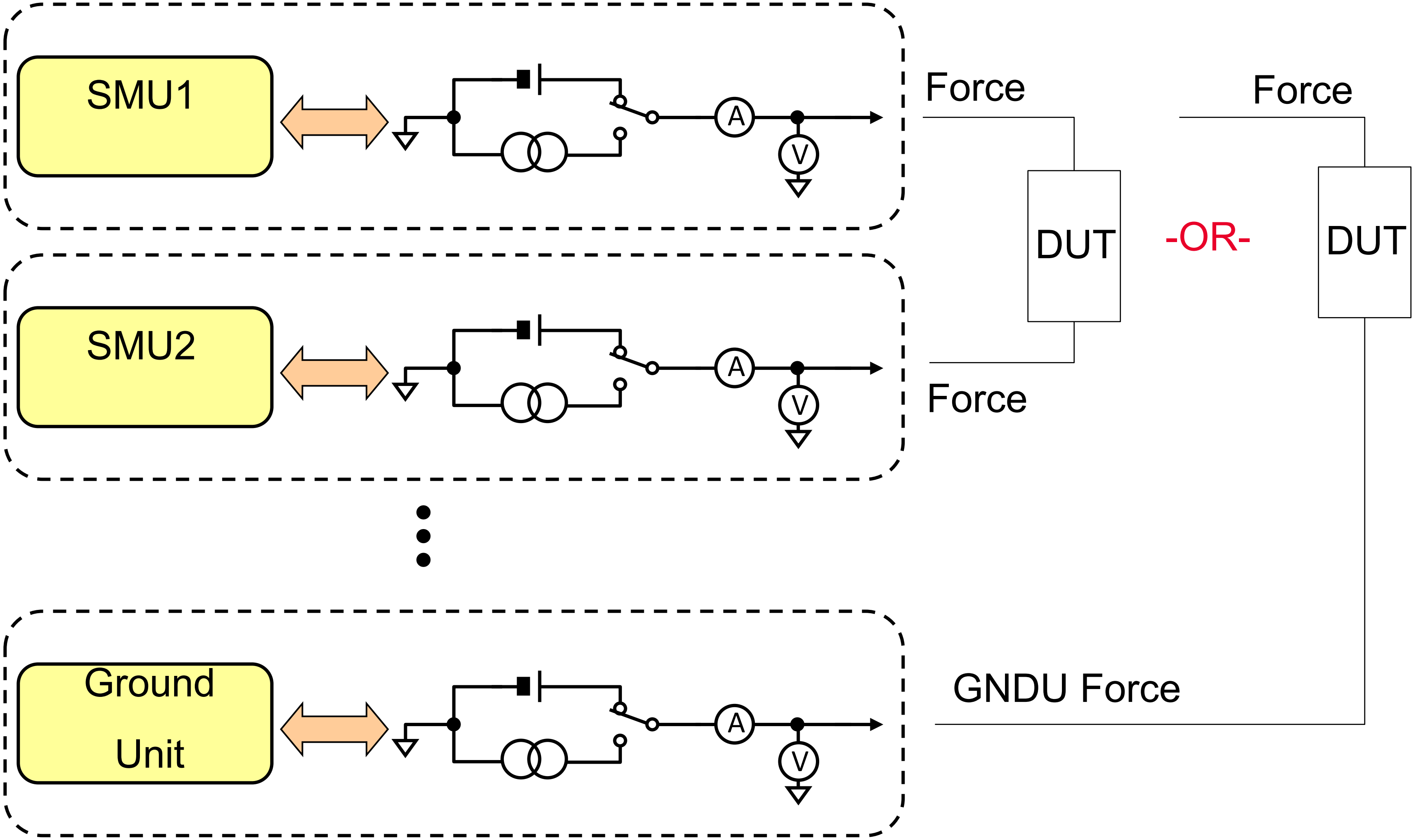

Making better connections: 4-Wire (Kelvin) Measurement

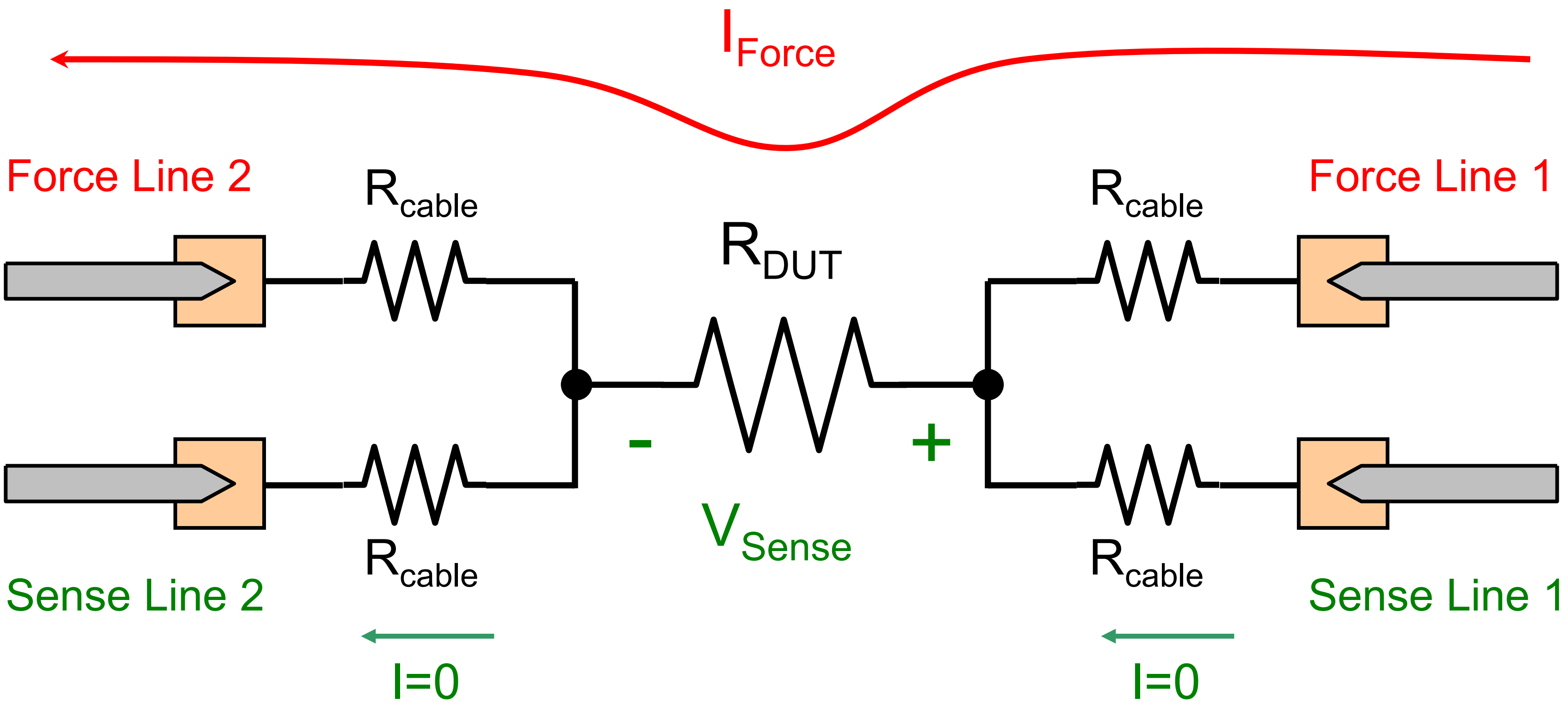

When making Kelvin measurement makes sense?

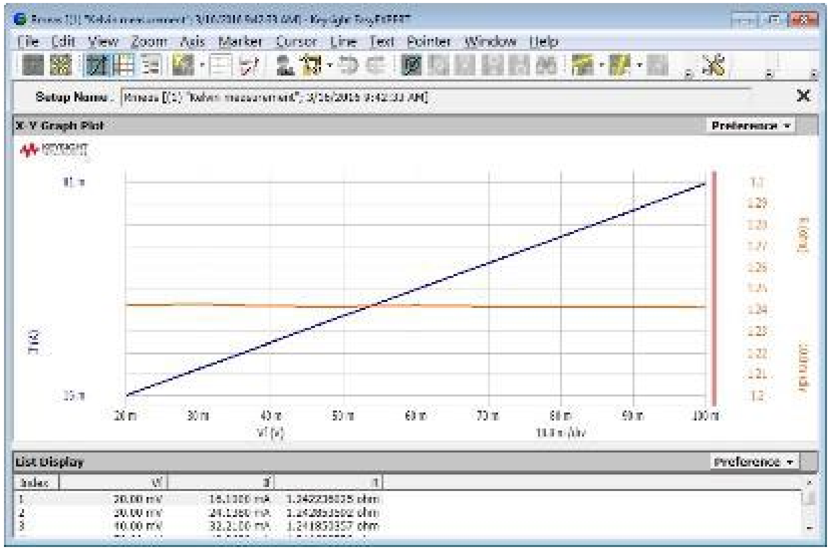

Index	Vf	If	R
1	20.00 mV	16.1000 mA	1.242236025 ohm
2	30.00 mV	24.1380 mA	1.242853502 ohm
3	40.00 mV	32.2100 mA	1.241850357 ohm

Kelvin

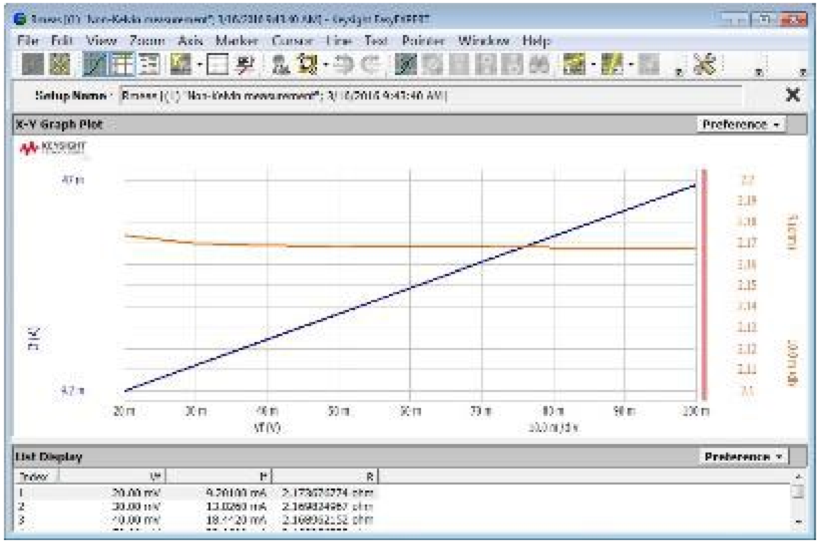

Index	Vf	If	R
1	20.00 mV	9.20100 mA	2.173676774 ohm
2	30.00 mV	13.8260 mA	2.169824967 ohm
3	40.00 mV	18.4420 mA	2.168962152 ohm

Non-Kelvin

Kelvin measurements are necessary when the resistance of the DUT you are trying to measure is comparable to the resistance of your measurement cables.

Guarded Kelvin Connection (Simplified Diagram)

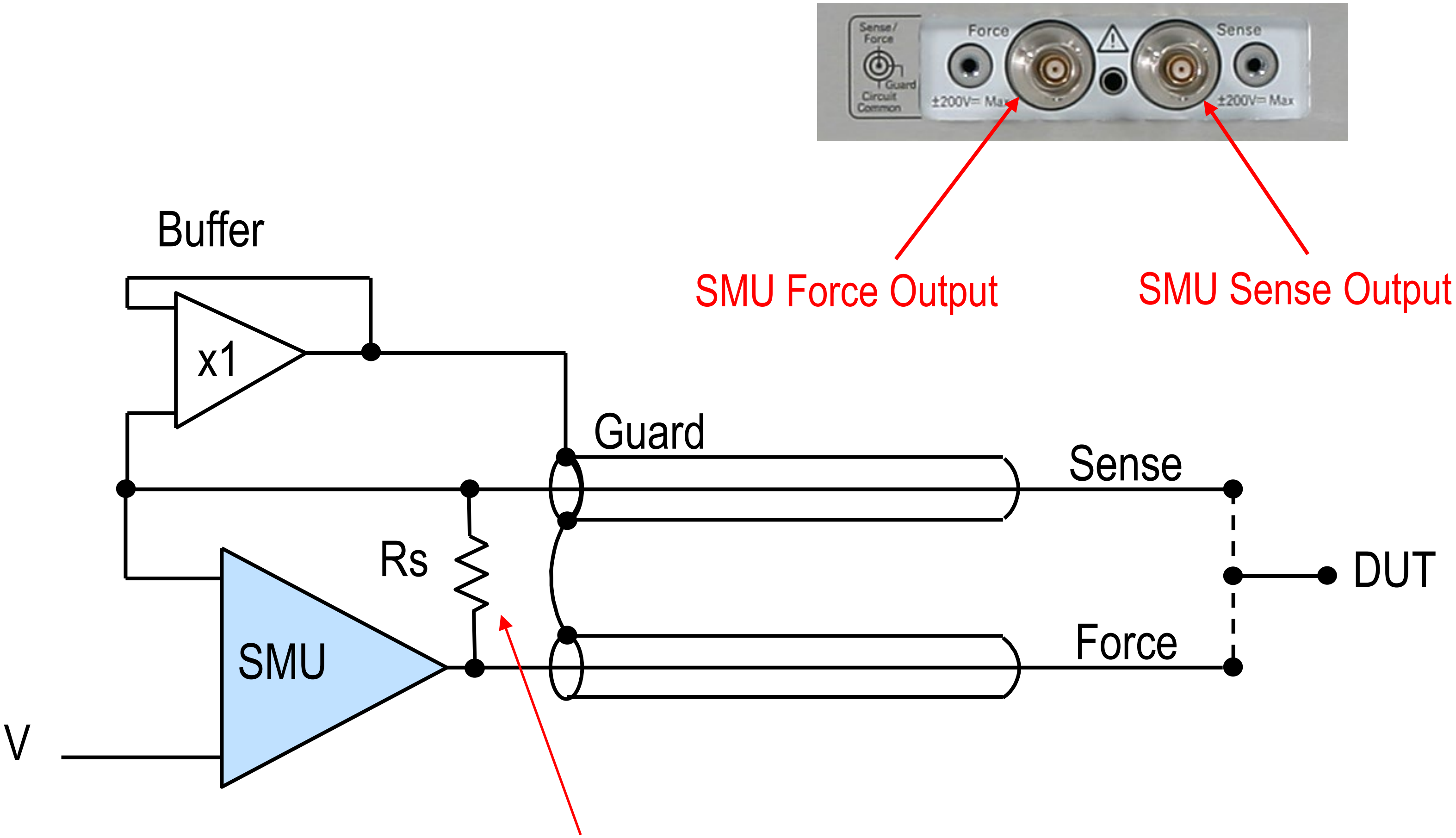

SMUs have an internal connection between the force and sense lines, so if you are not making a Kelvin measurement then you can just connect up the force line.

Making correct connections: 4-wire (Kelvin)

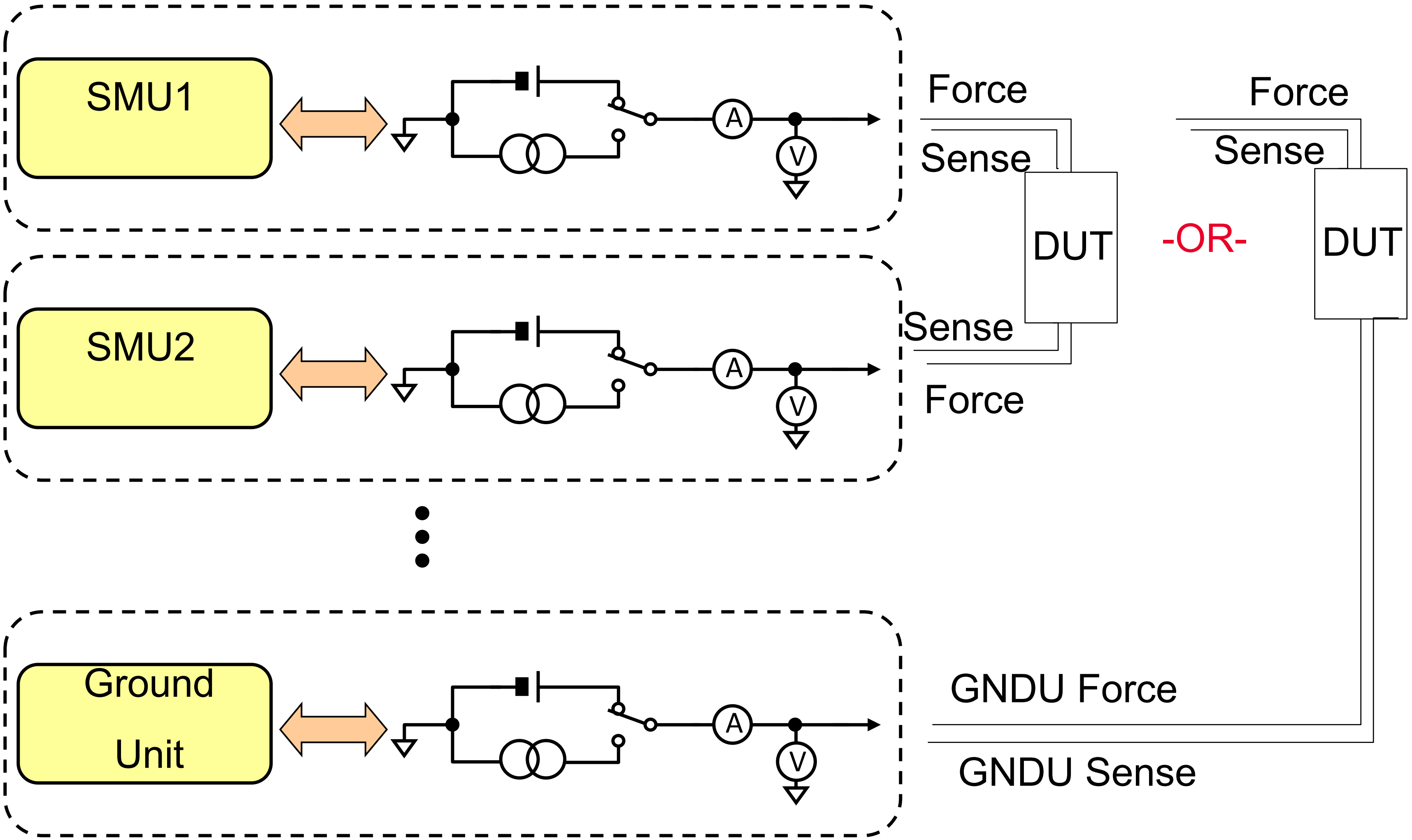

Incorrect connections: DO NOT DO THIS!

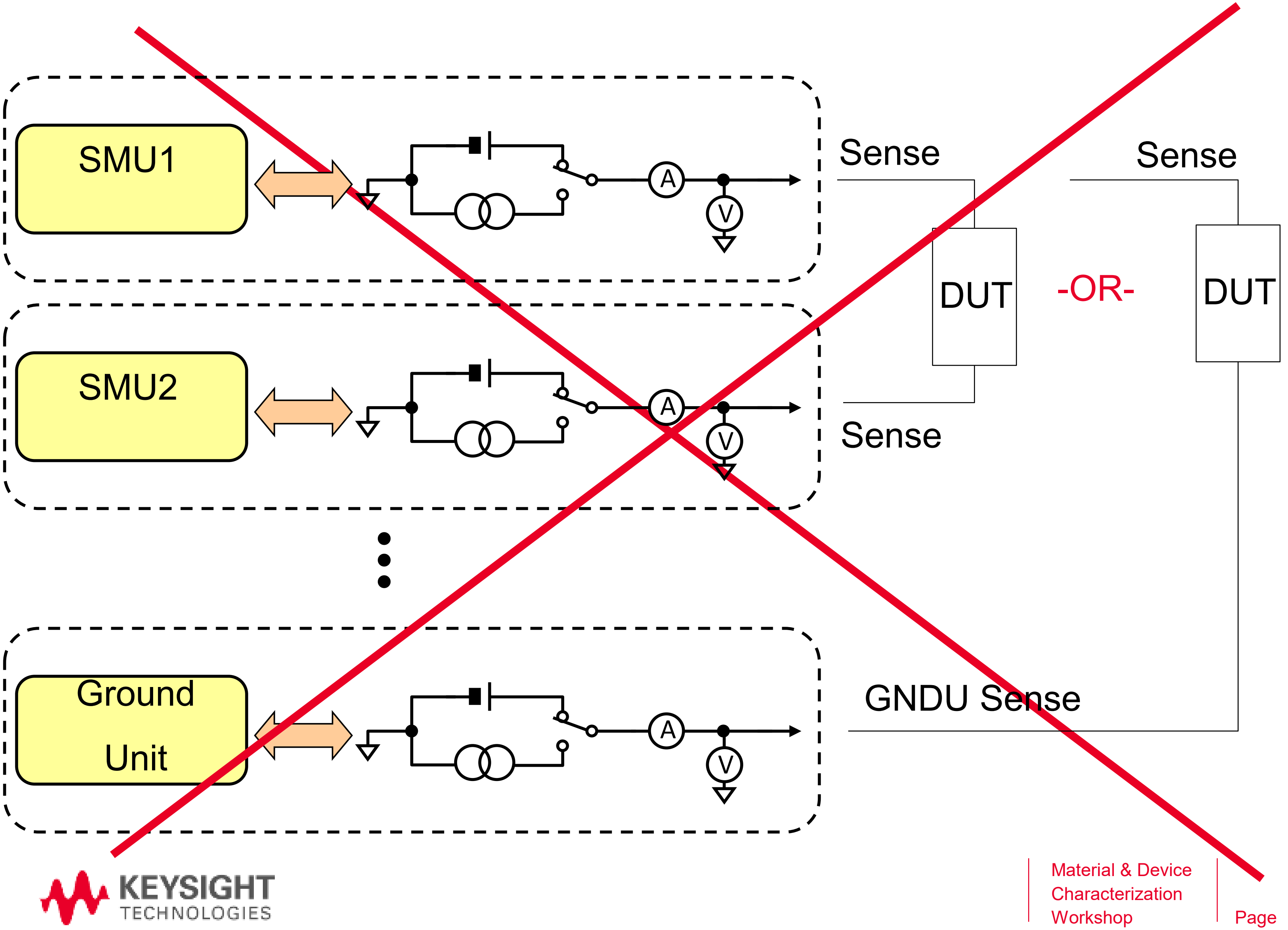

Why are Triaxial Cables Needed for Low Current?

BNC (Coaxial) Cable:

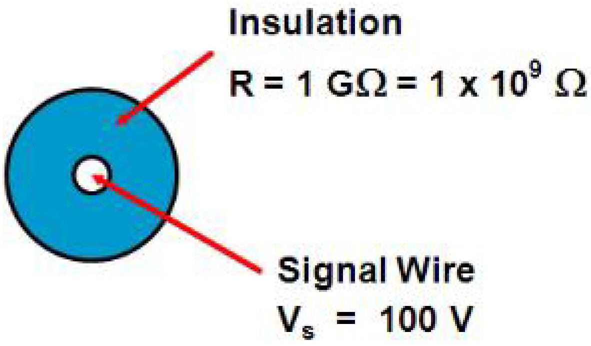

Leakage Current:

$$\frac{100\ V}{1 \times 10^{9}\Omega} = 100\ nA$$

Triaxial Cable:

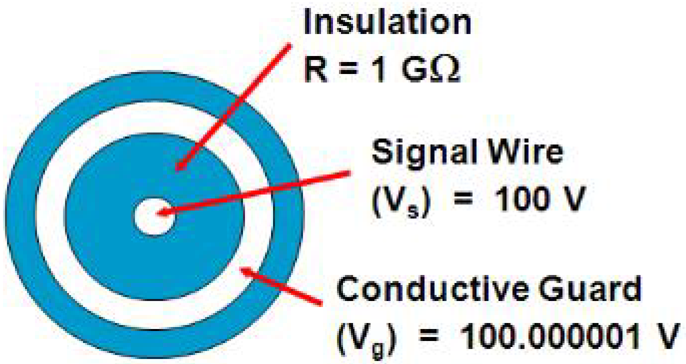

Leakage Current:

$$\frac{(100.000001\ V - 100\ V)}{1 \times 10^{9}\Omega} = 1\ fA$$

Triaxial Guard Connection (Simplified Diagram)

The guard voltage tracks the force voltage exactly.

Cable charging current and noise is eliminated.

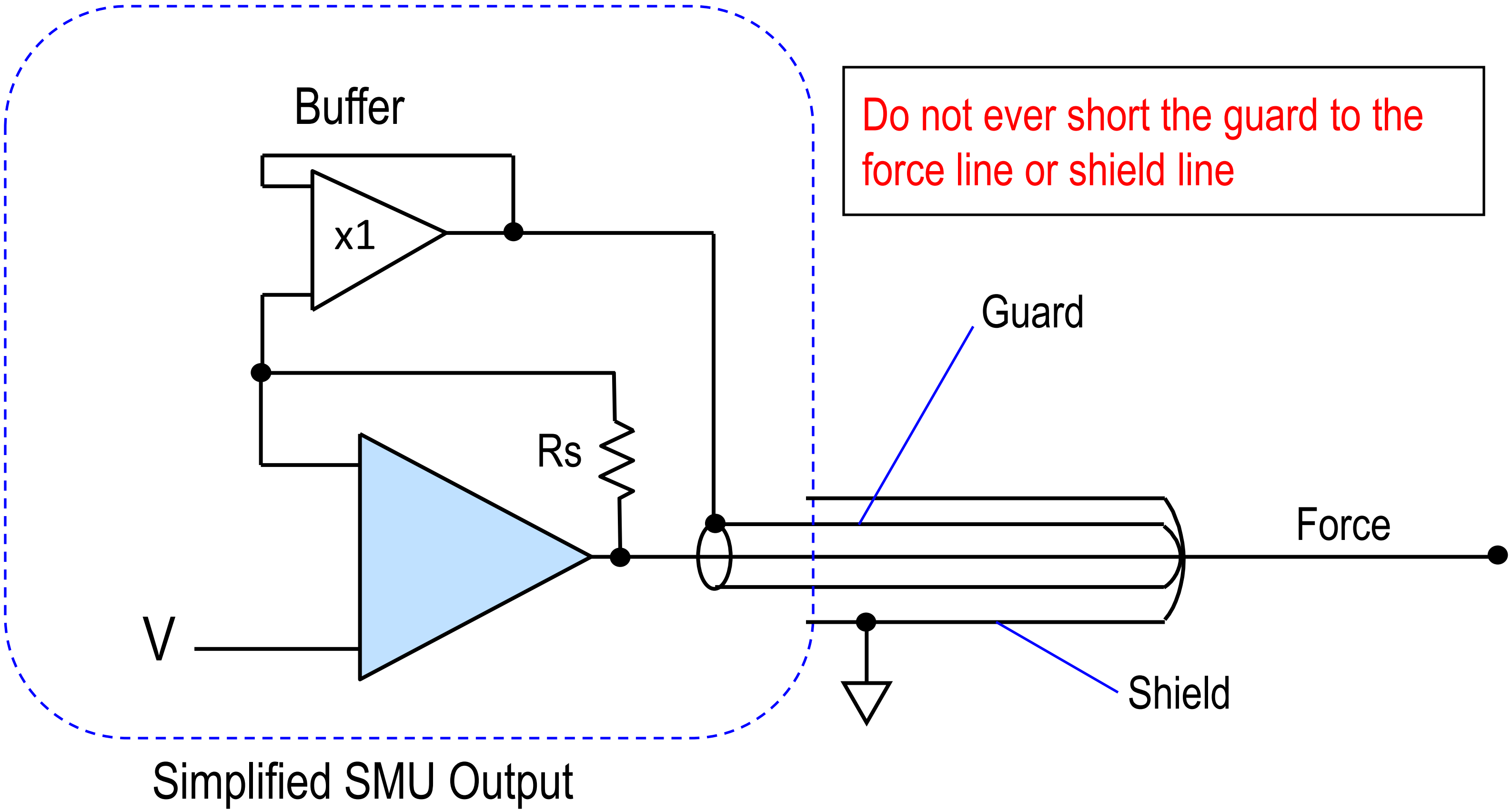

Do not ever short the guard to the force line or shield line

Triaxial vs. Coaxial Cabling

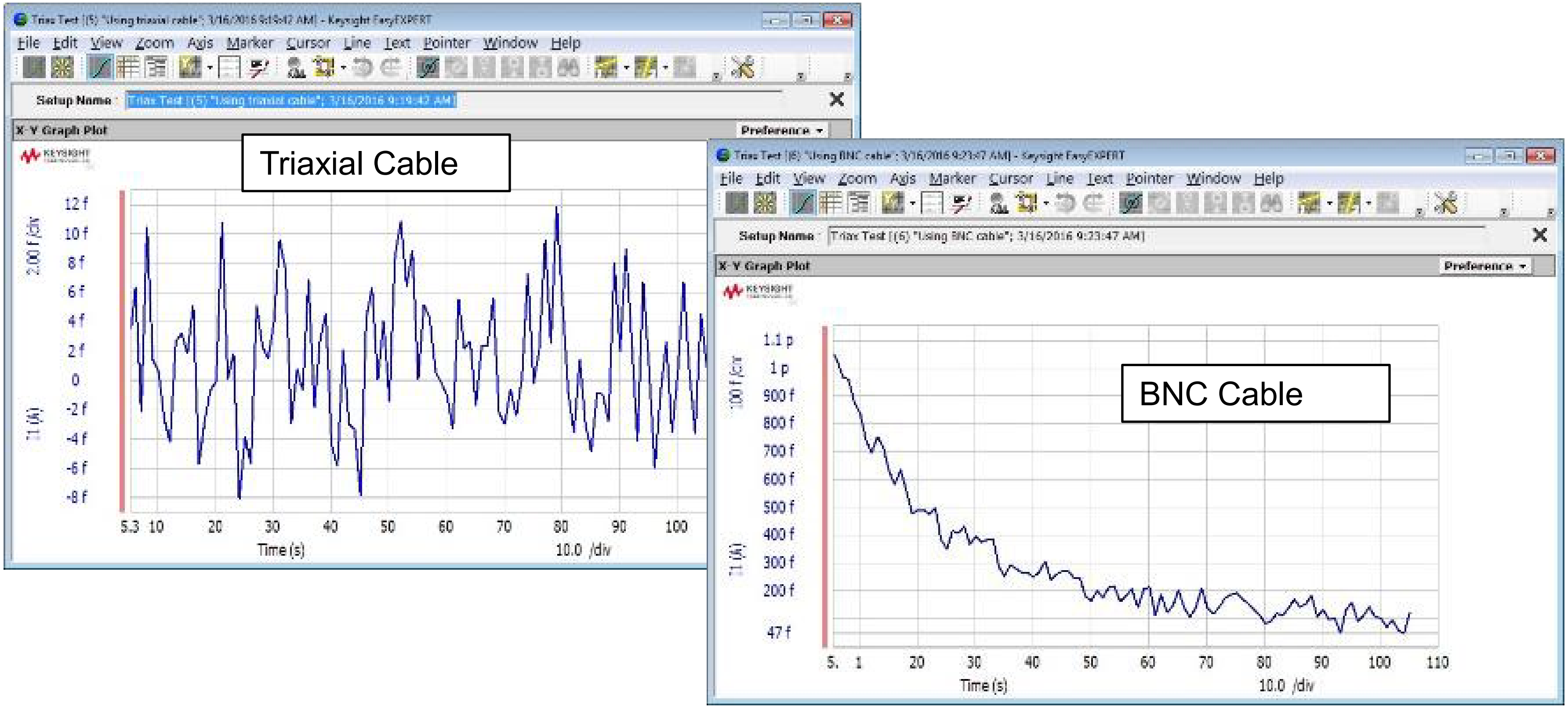

Triax Test [(5) "Using triaxial cable"; 3/16/2016 9:19:42 AM] - Keysight EasyEXPERT

Setup Name : Triax Test [(5) "Using triaxial cable"; 3/16/2016 9:19:42 AM]

Triaxial Cable

Triax Test [(6) "Using BNC cable"; 3/16/2016 9:23:47 AM] - Keysight EasyEXPERT

Setup Name : Triax Test [(6) "Using BNC cable"; 3/16/2016 9:23:47 AM]

BNC Cable

Coaxial cables have higher leakage and take much longer to settle

TRIAX vs COAX: Identifying connections

TRIAX vs COAX

Choosing correct adapter

- E1: Puts the guard on the outside of coax cable. Good for low current, but potentially hazardous
- E2: Most popular adapter
- E3-E5: DO NOT USE

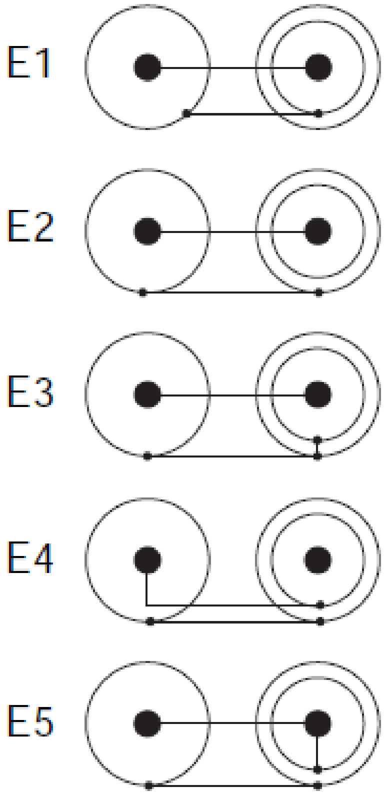

Electro-Mechanical Noise from Cable - 1

The triboelectric & piezoelectric effects

- The triboelectric effect generates noise current flow due to friction between a conductor and an insulator.
- The piezoelectric effect generates noise current flow due to mechanical stress on the insulator.

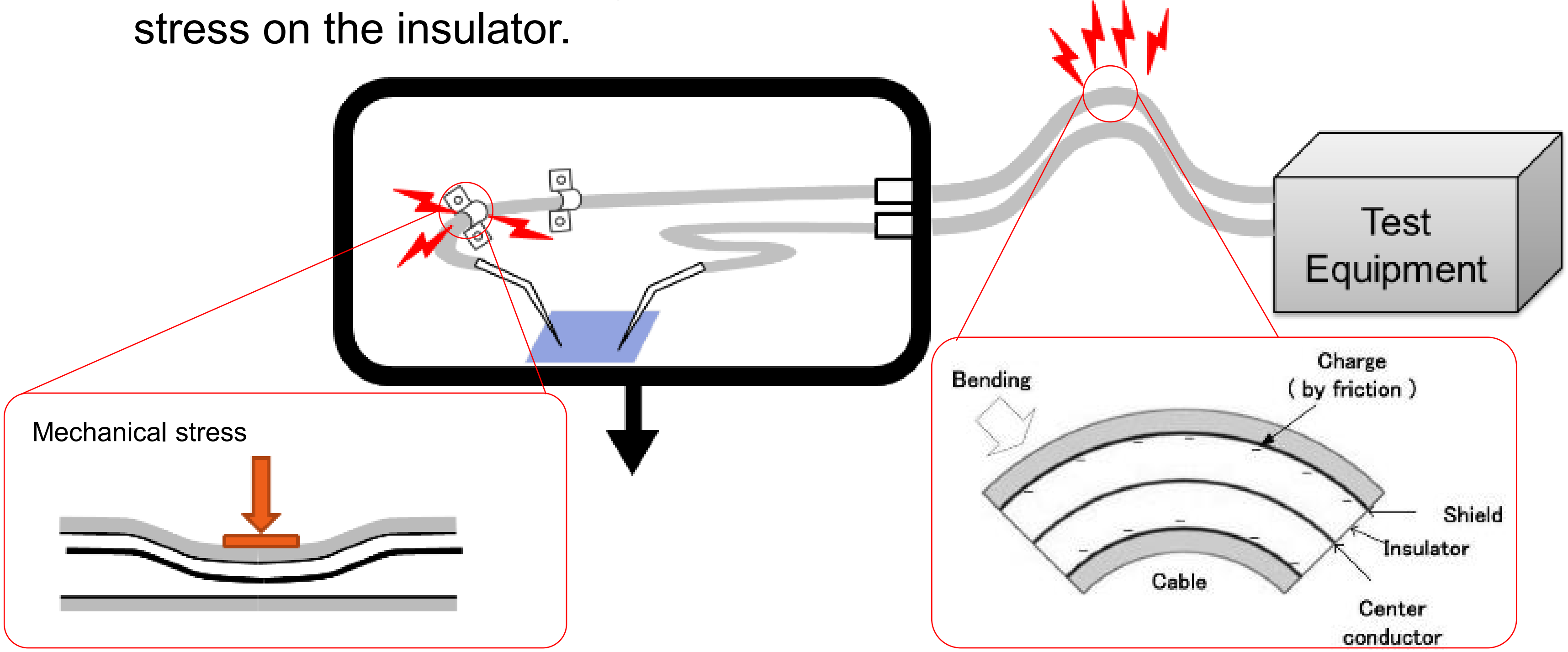

Electro-Mechanical Noise from Cable - 2

Keysight low noise cable

Use a low noise cable and isolate measurements from vibrations.

Keysight triaxial cable (16494A)

A semiconductor layer positioned between the insulator and the inner shield minimizes the triboelectric charge generated at this boundary by friction.

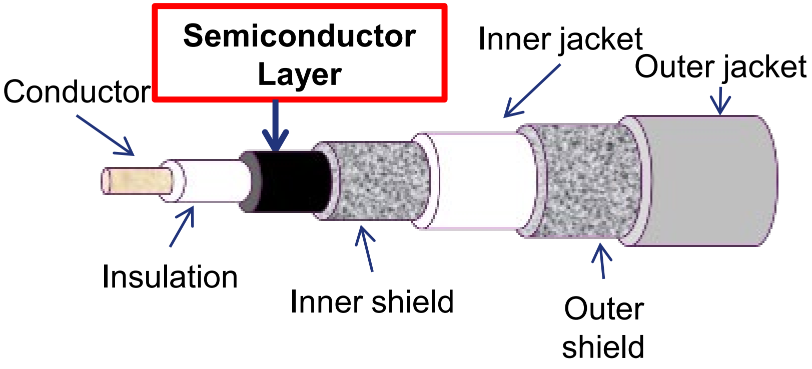

Noise current comparison

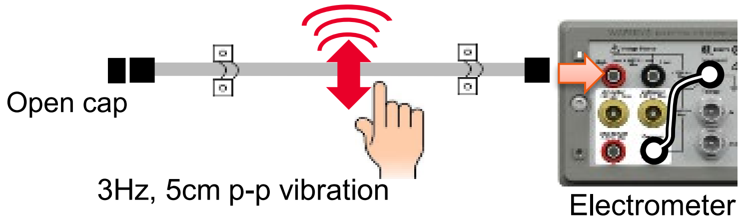

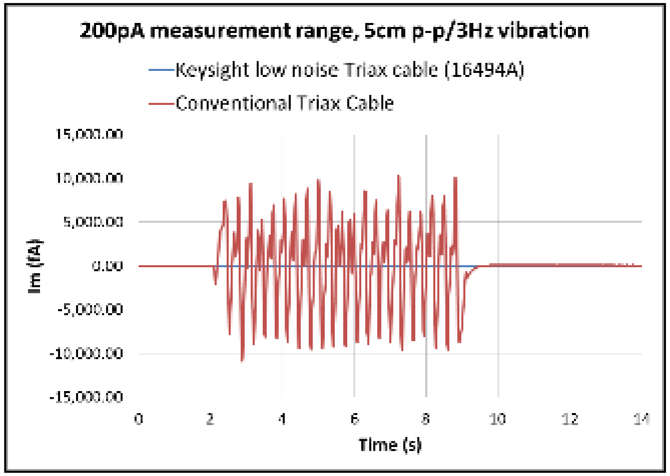

Stray Leakage Currents Can Also Prevent Accurate Low-Current Measurements

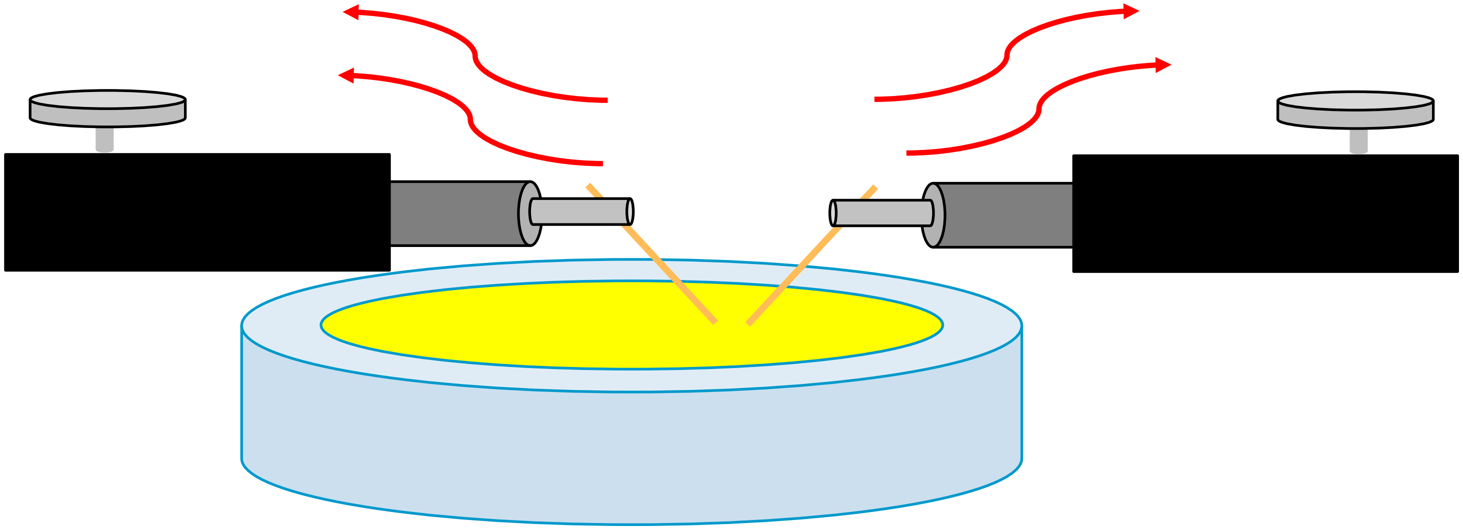

However, as long as the leakage current are <u>consistent</u>, Keysight instrumentation can eliminate them using the <u>SMU Zero Function.</u>

Demo: Removing Stray Leakage Currents - 1

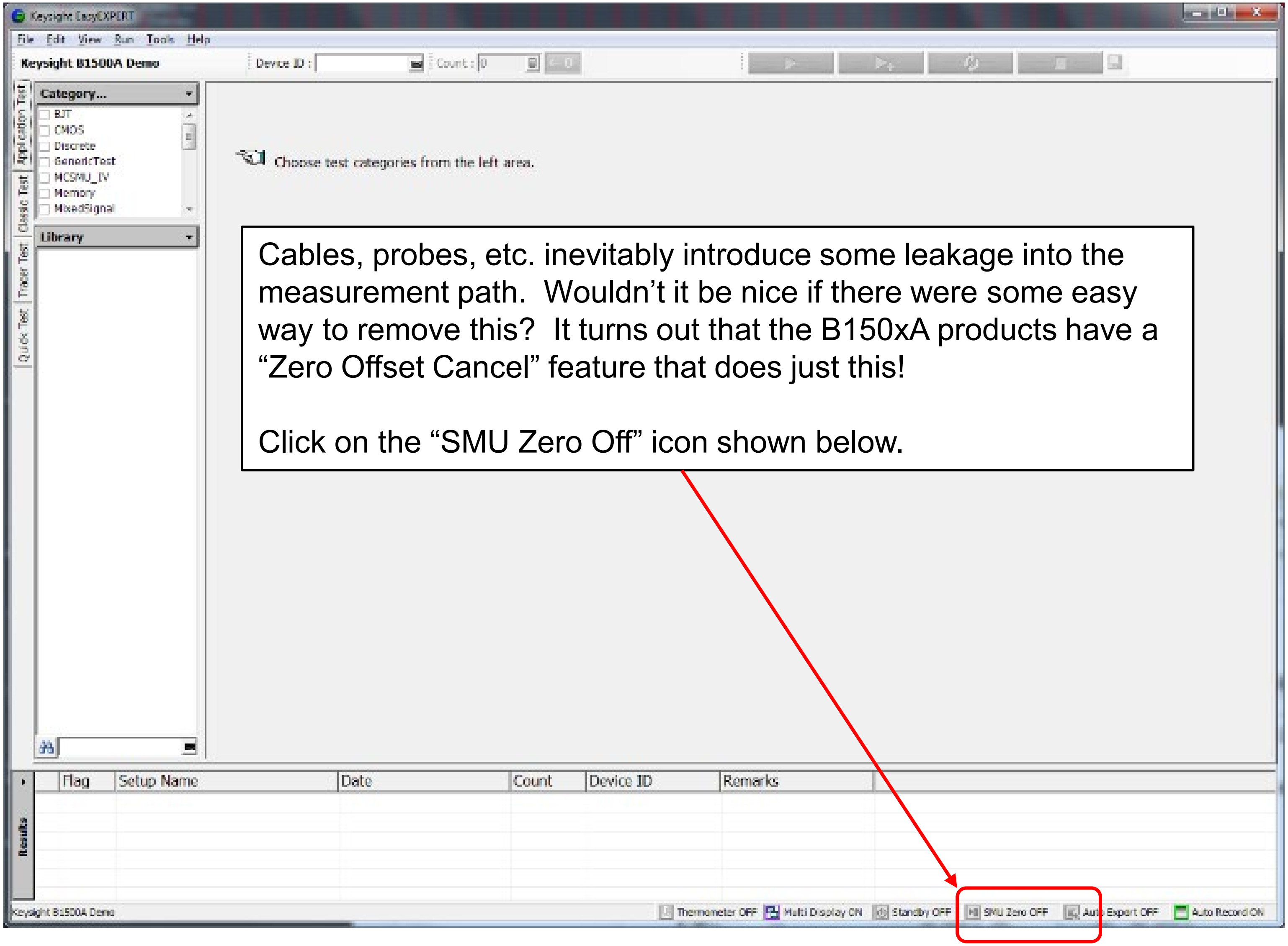

Choose test categories from the left area.

Cables, probes, etc. inevitably introduce some leakage into the measurement path. Wouldn't it be nice if there were some easy way to remove this? It turns out that the B150xA products have a "Zero Offset Cancel" feature that does just this!

Click on the "SMU Zero Off" icon shown below.

Demo: Removing Stray Leakage Currents - 2

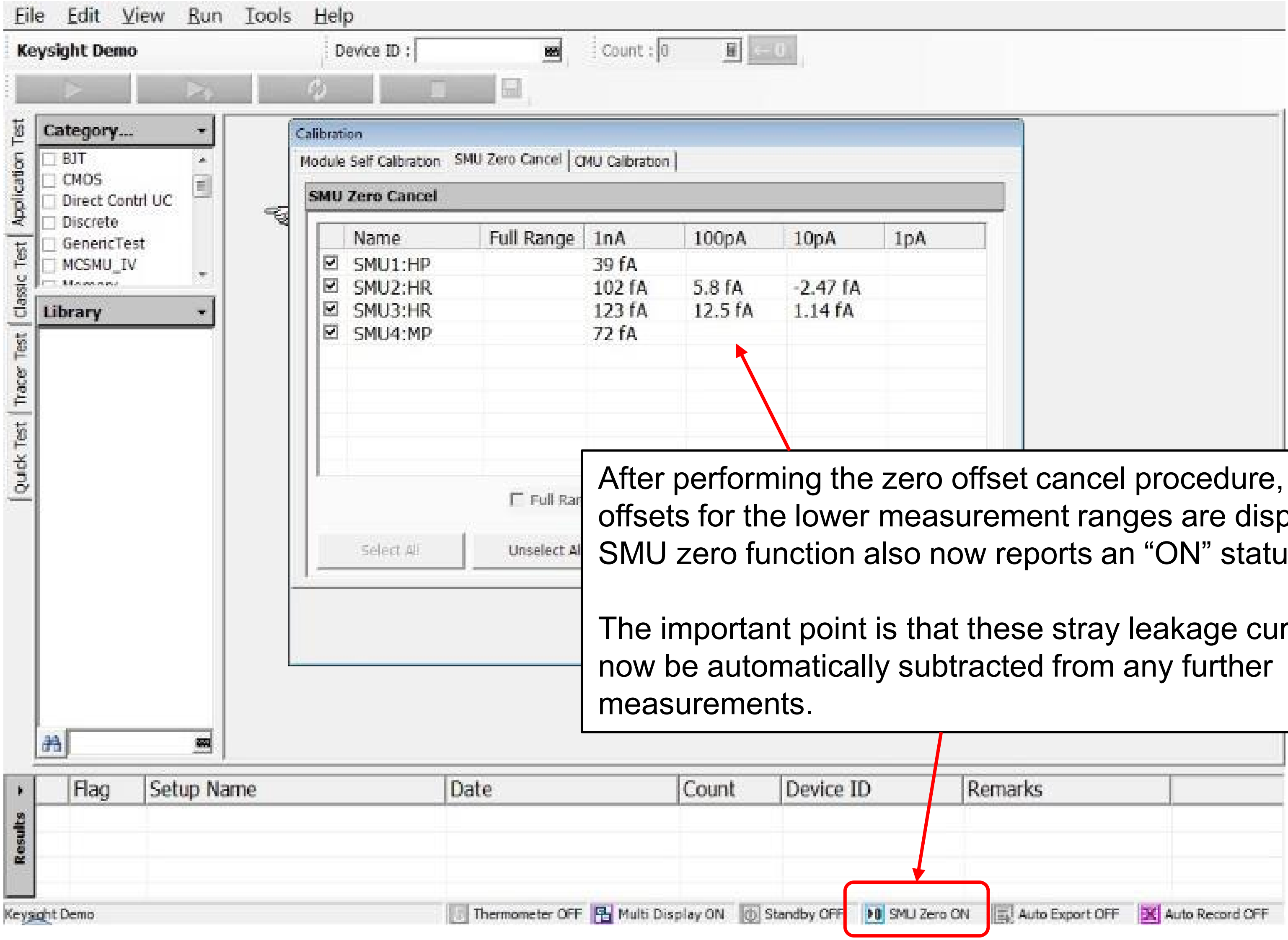

SMU Zero Cancel

	Name	Full Range	1nA	100pA	10pA	1pA
☑	SMU1:HP		39 fA			
☑	SMU2:HR		102 fA	5.8 fA	-2.47 fA	
☑	SMU3:HR		123 fA	12.5 fA	1.14 fA	
☑	SMU4:MP		72 fA			

Flag	Setup Name	Date	Count	Device ID	Remarks

After performing the zero offset cancel procedure, the current offsets for the lower measurement ranges are displayed. The SMU zero function also now reports an “ON” status.

The important point is that these stray leakage currents will now be automatically subtracted from any further measurements.

Demo: Removing Stray Leakage Currents - 3

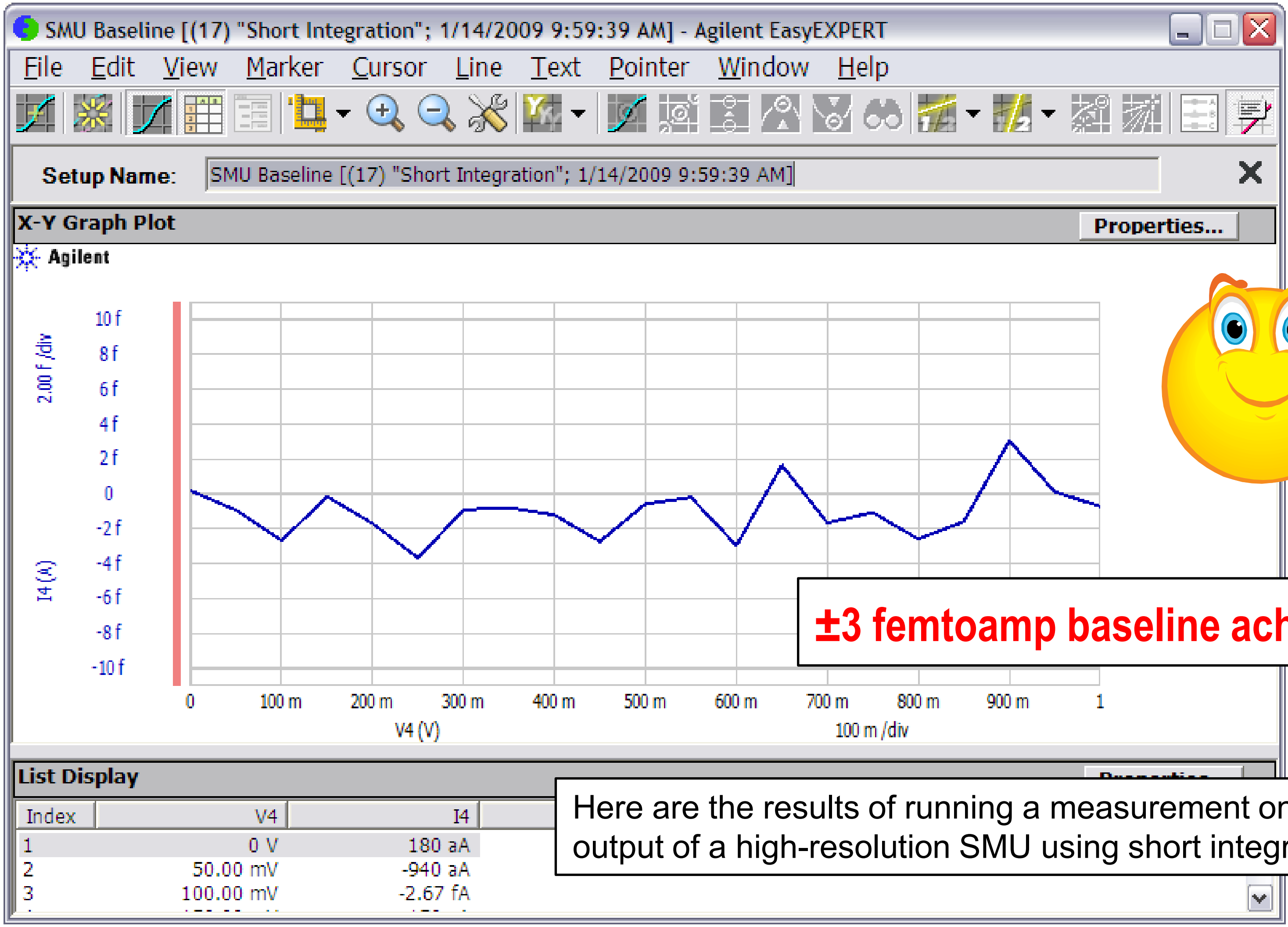

Setup Name: SMU Baseline [(17) "Short Integration"; 1/14/2009 9:59:39 AM]

Index	V4	I4
1	0 V	180 aA
2	50.00 mV	-940 aA
3	100.00 mV	-2.67 fA

±3 femtoamp baseline achieved

Here are the results of running a measurement on the open output of a high-resolution SMU using short integration time.

Measurement Parameters: RANGE

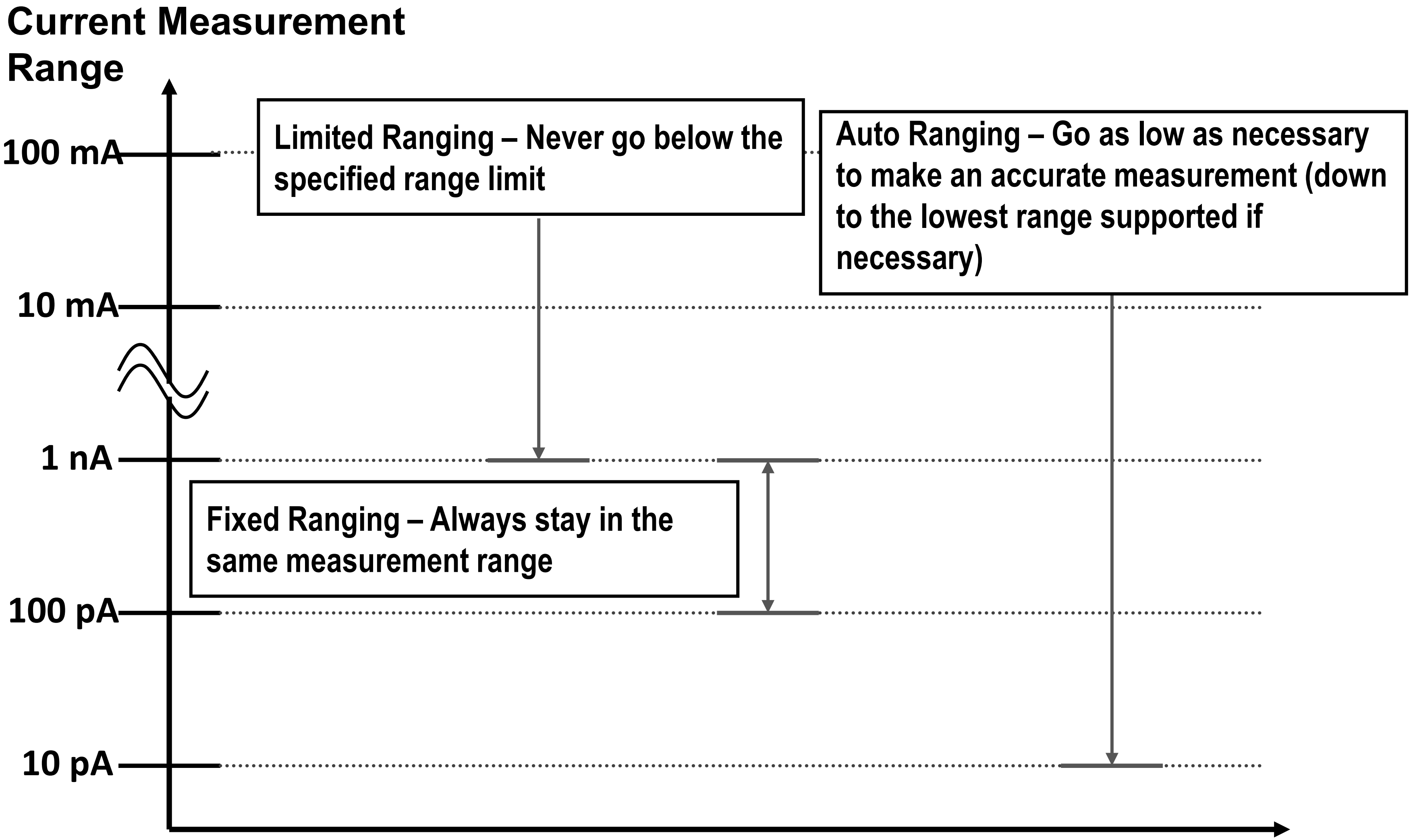

Limited Ranging – Never go below the specified range limit

Auto Ranging – Go as low as necessary to make an accurate measurement (down to the lowest range supported if necessary)

Fixed Ranging – Always stay in the same measurement range

Measurement Parameters – INTEGRATION TIME

Correct integration time reduces measurement noise.

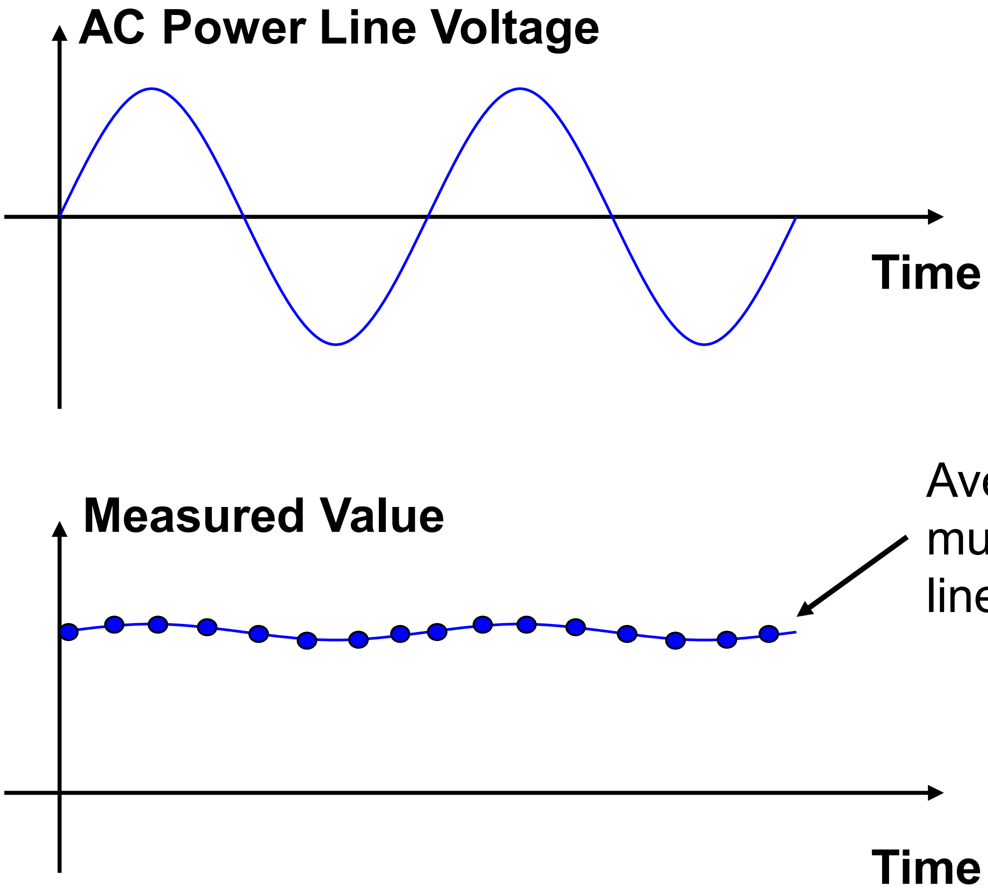

Averaged over multiple power line cycles (PLC)

Integration **DOES NOT** have any effect on the measurement resolution.

Measurement Parameters – Hold Time and Delay Time

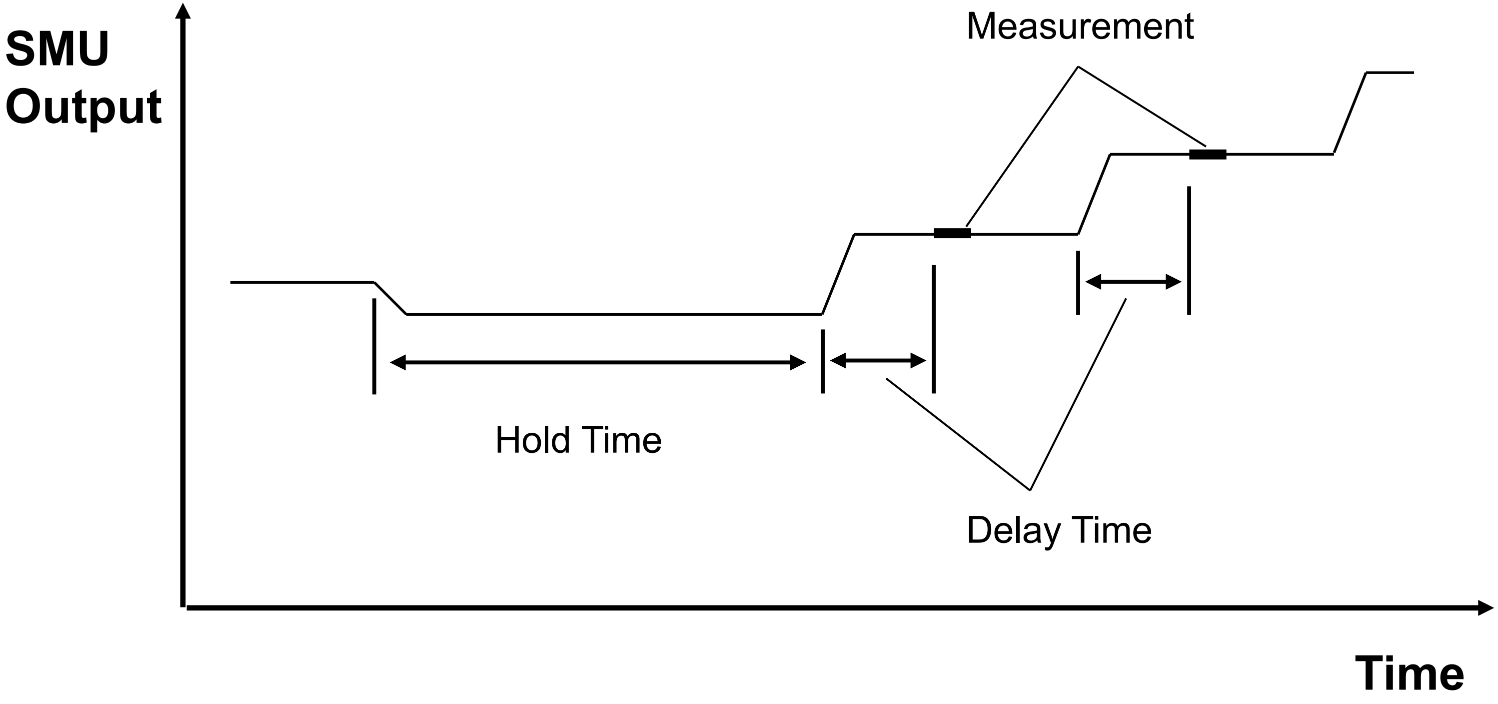

The hold time and delay time settings allow you to specify how long to wait before starting a measurement after the SMU applies voltage or current.

DEMO: MOSFET Measurements

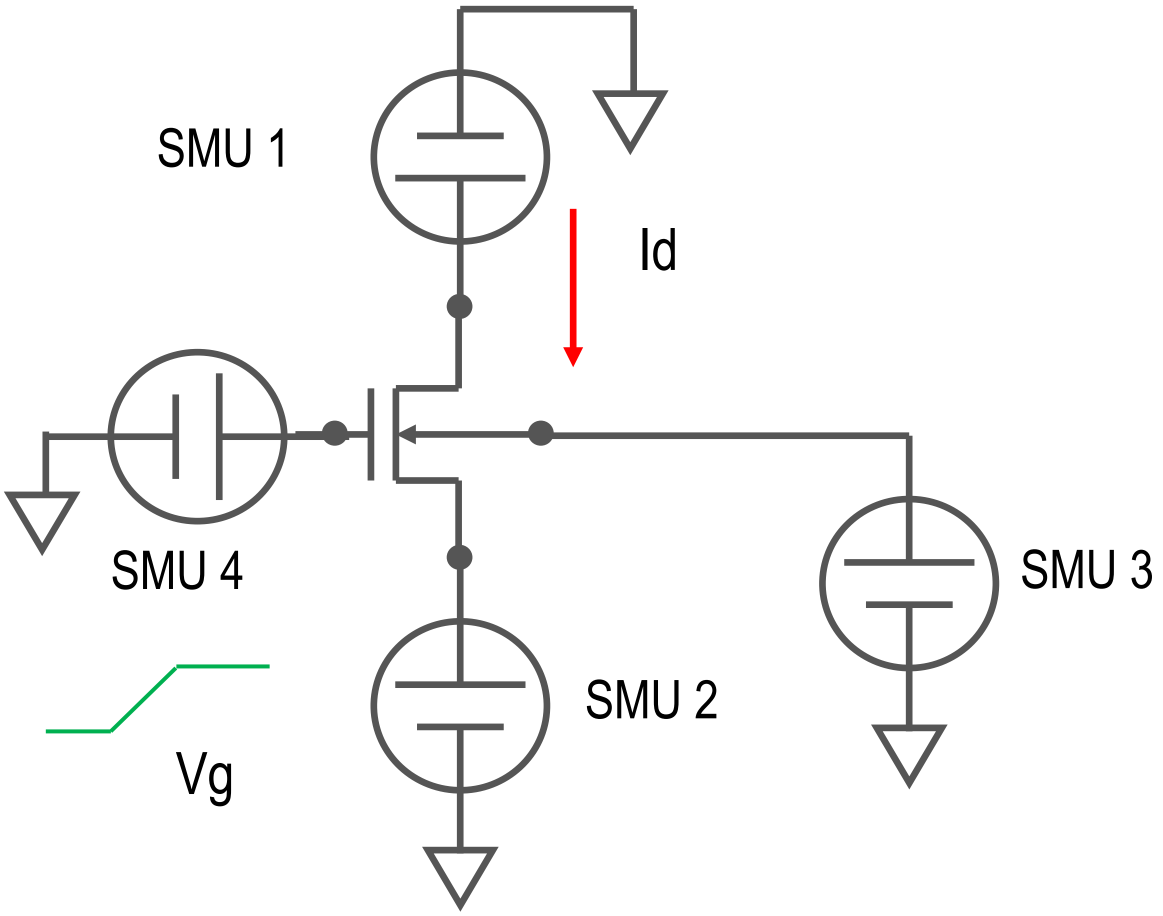

Sweep Measurement Parameters - 1

Variable 1 (VAR1) means a swept variable

	Single Sweep	Double Sweep
Linear Sweep	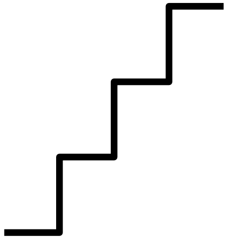	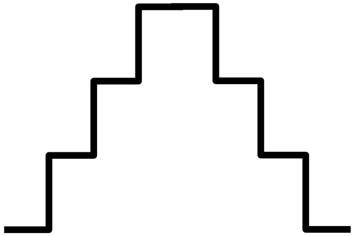
Log Sweep	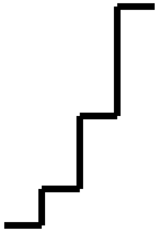	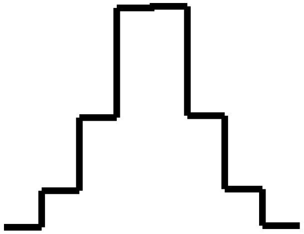

Sweep Measurement Parameters - 2

Variable 2 (VAR2) is the subordinate sweep variable

VAR1’ is a synchronized sweep variable

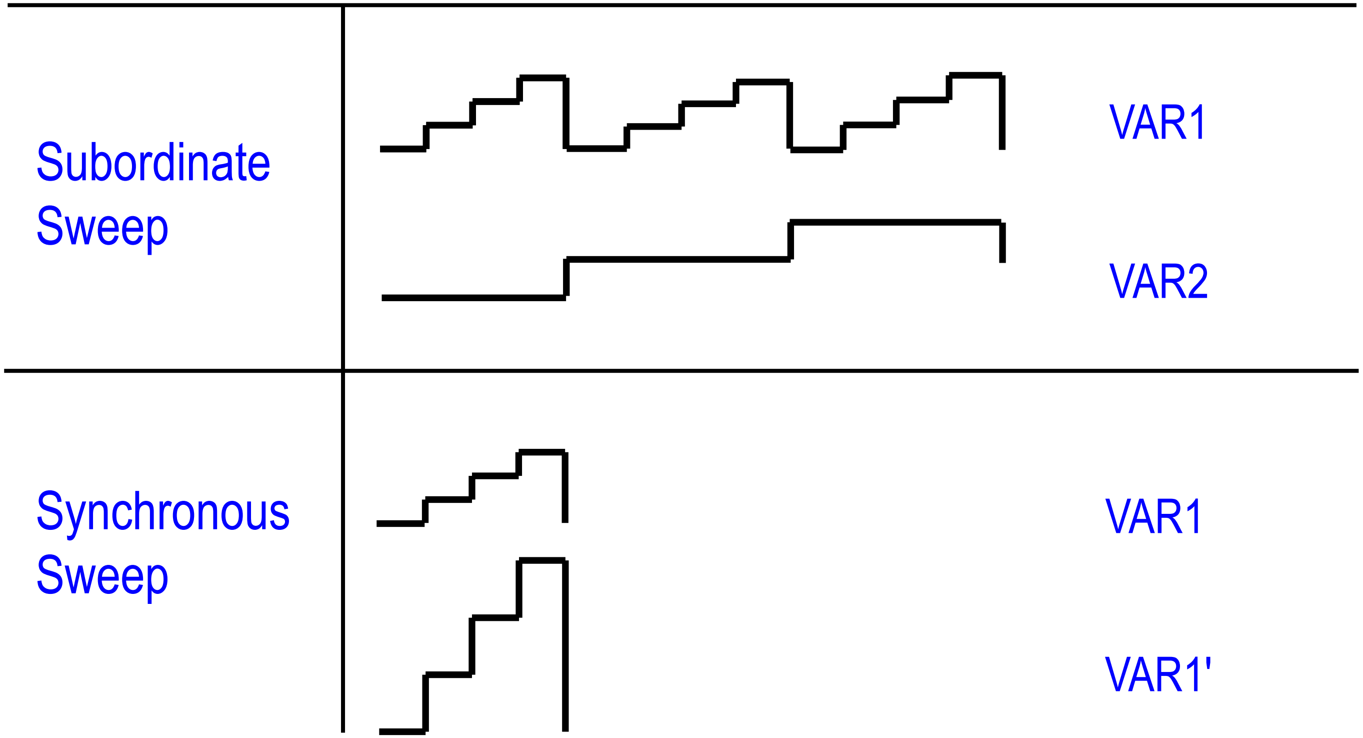

KEYSIGHT
TECHNOLOGIES

Capacitance Measurement

MOS Transistors are Also Capacitors

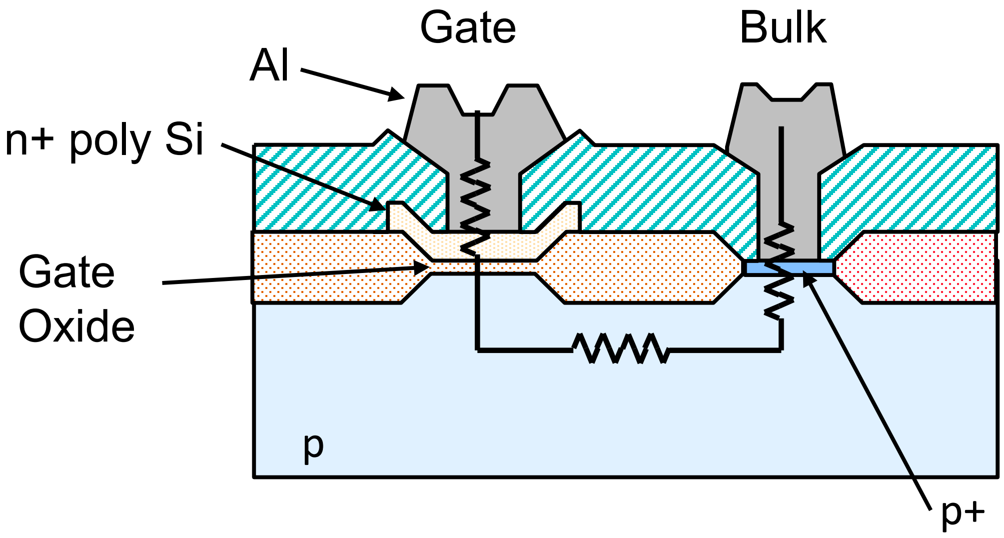

MOSFET Capacitor

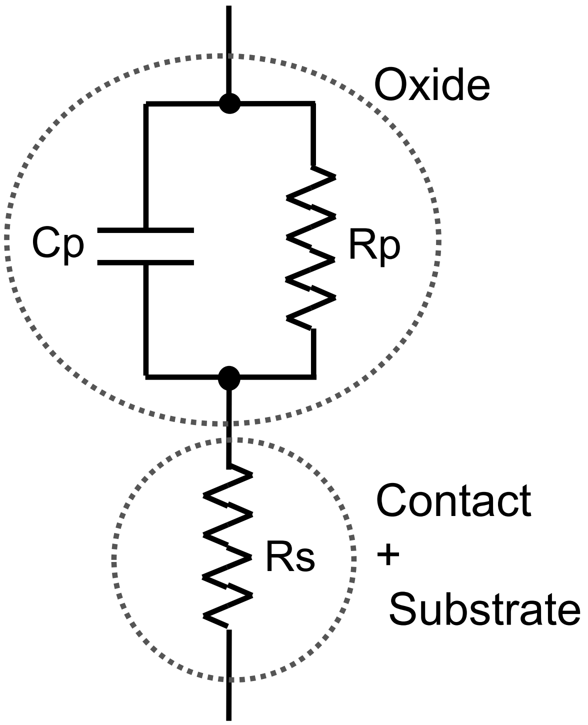

Equivalent Circuit

Key Point: MOS capacitors are voltage dependent capacitors; the value of the measured capacitance depends upon the applied DC voltage.

Why are MOSFET Capacitance Measurements Important?

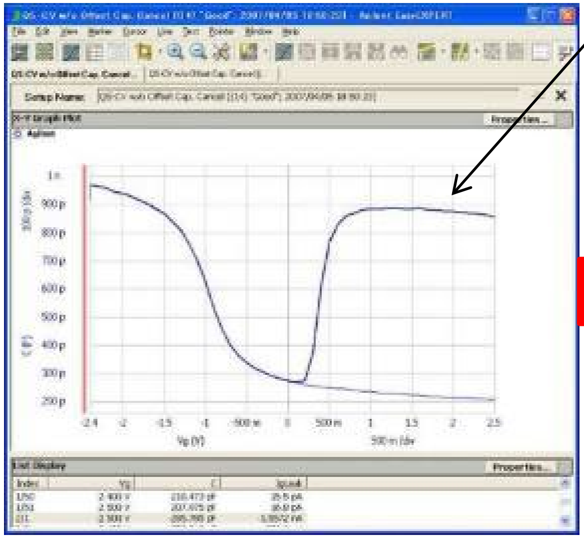

Note that the value of the capacitance varies with applied DC voltage

Capacitance versus voltage measurement

+

Physical device parameters

(area, work function, etc.)

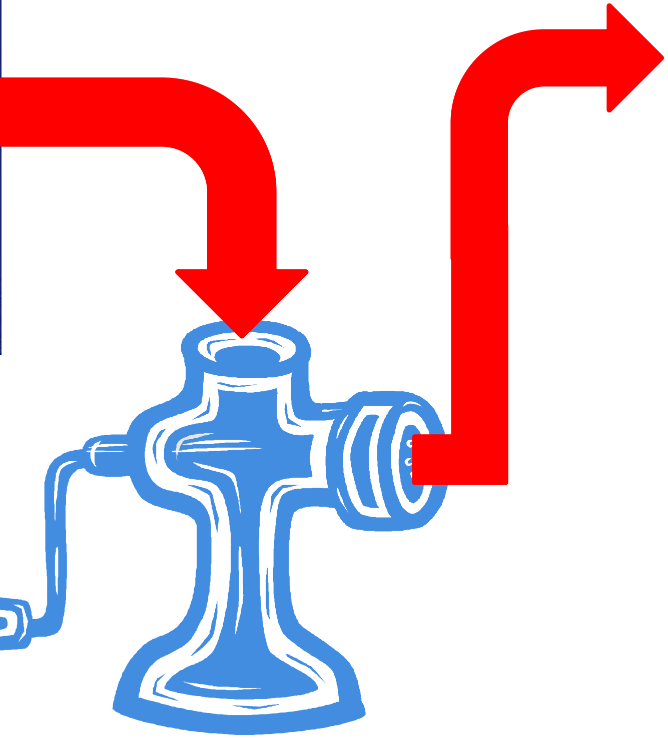

Mathematical Calculations

- Gate oxide capacitance
- Gate oxide thickness
- Substrate impurity concentration
- Fermi potential
- Flat band capacitance
- Flat band voltage
- Surface charge density
- Fixed depletion layer charge
- Threshold voltage
- Switching characteristics and power loss

Key Device Parameters

The Step Voltage QSCV Measurement Technique (Using SMUs):

The step voltage technique is very similar to a standard voltage sweep. The difference is that at each point on the sweep the voltage is “bumped” and the resultant current (charge) is measured. The charge and voltage can then be used to determine capacitance at that point.

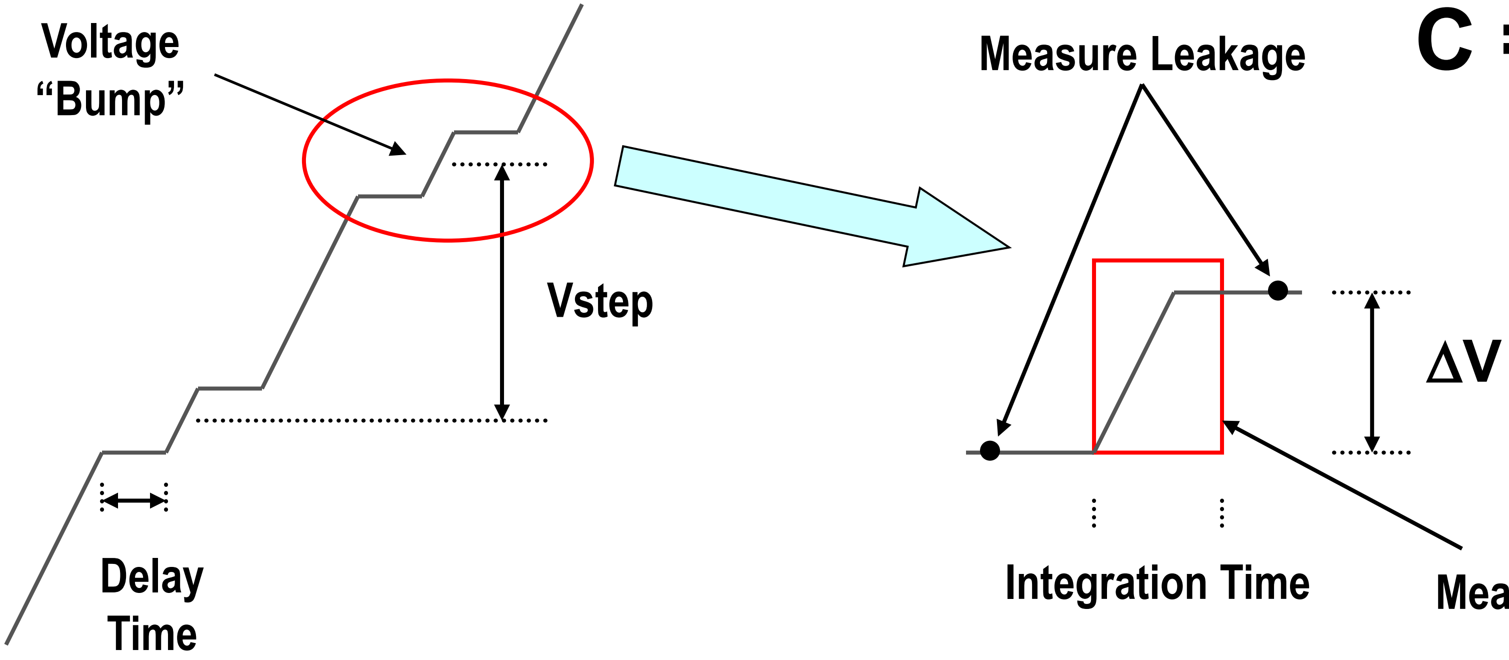

$$C = \frac{\Delta Q}{\Delta V}$$

QSCV Measurement: How To

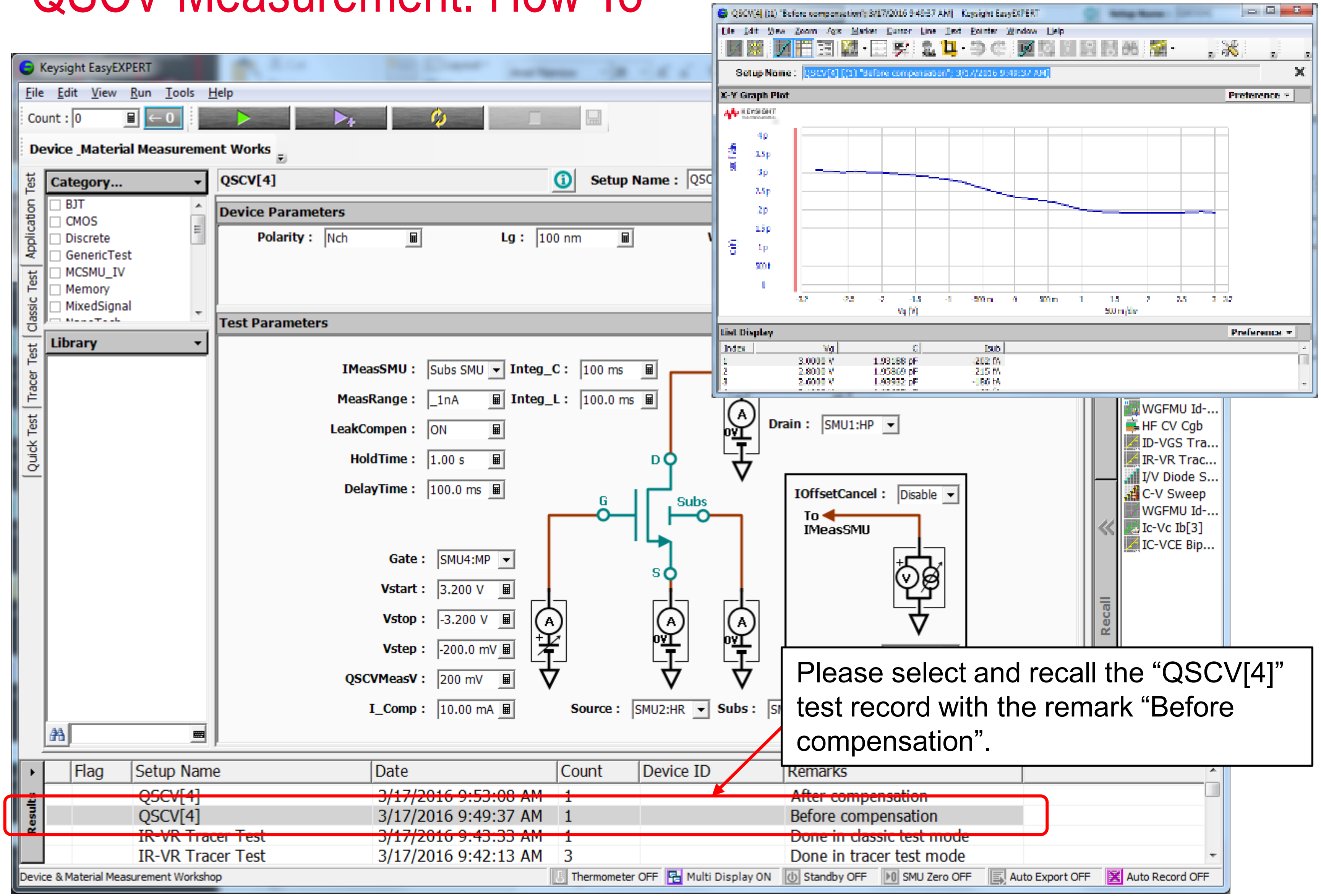

Polarity : Nch

Lg : 100 nm

IMeasSMU : Subs SMU

Integ_C : 100 ms

MeasRange : _1nA

Integ_L : 100.0 ms

LeakCompen : ON

HoldTime : 1.00 s

DelayTime : 100.0 ms

Gate : SMU4:MP

Vstart : 3.200 V

Vstop : -3.200 V

Vstep : -200.0 mV

QSCVMeasV : 200 mV

I_Comp : 10.00 mA

Source : SMU2:HR

Drain : SMU1:HP

IOffsetCancel : Disable

Index	Vg	C	Isub
1	3.0000 V	1.93188 pF	202 fA
2	2.8000 V	1.93809 pF	215 fA
3	2.6000 V	1.93932 pF	-186 fA

Flag	Setup Name	Date	Count	Device ID	Remarks
	QSCV[4]	3/17/2016 9:53:08 AM	1		After compensation
	QSCV[4]	3/17/2016 9:49:37 AM	1		Before compensation
	IR-VR Tracer Test	3/17/2016 9:43:33 AM	1		Done in classic test mode
	IR-VR Tracer Test	3/17/2016 9:42:13 AM	3		Done in tracer test mode

Please select and recall the “QSCV[4]” test record with the remark “Before compensation”.

QSCV Measurement: Parasitic Capacitance Effects

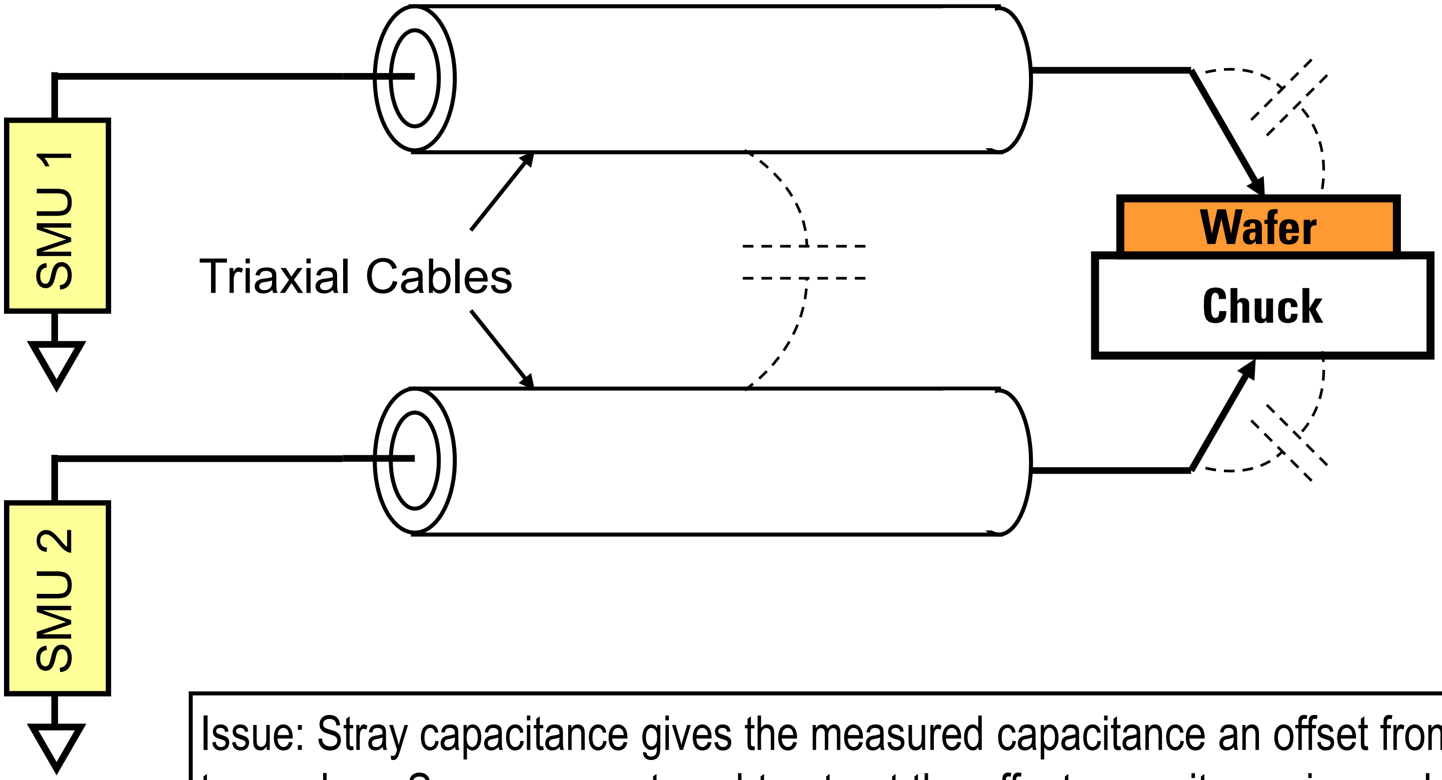

Issue: Stray capacitance gives the measured capacitance an offset from the true value. Some means to subtract out the offset capacitance is needed!

QSCV Measurement: Offset Cancellation How To

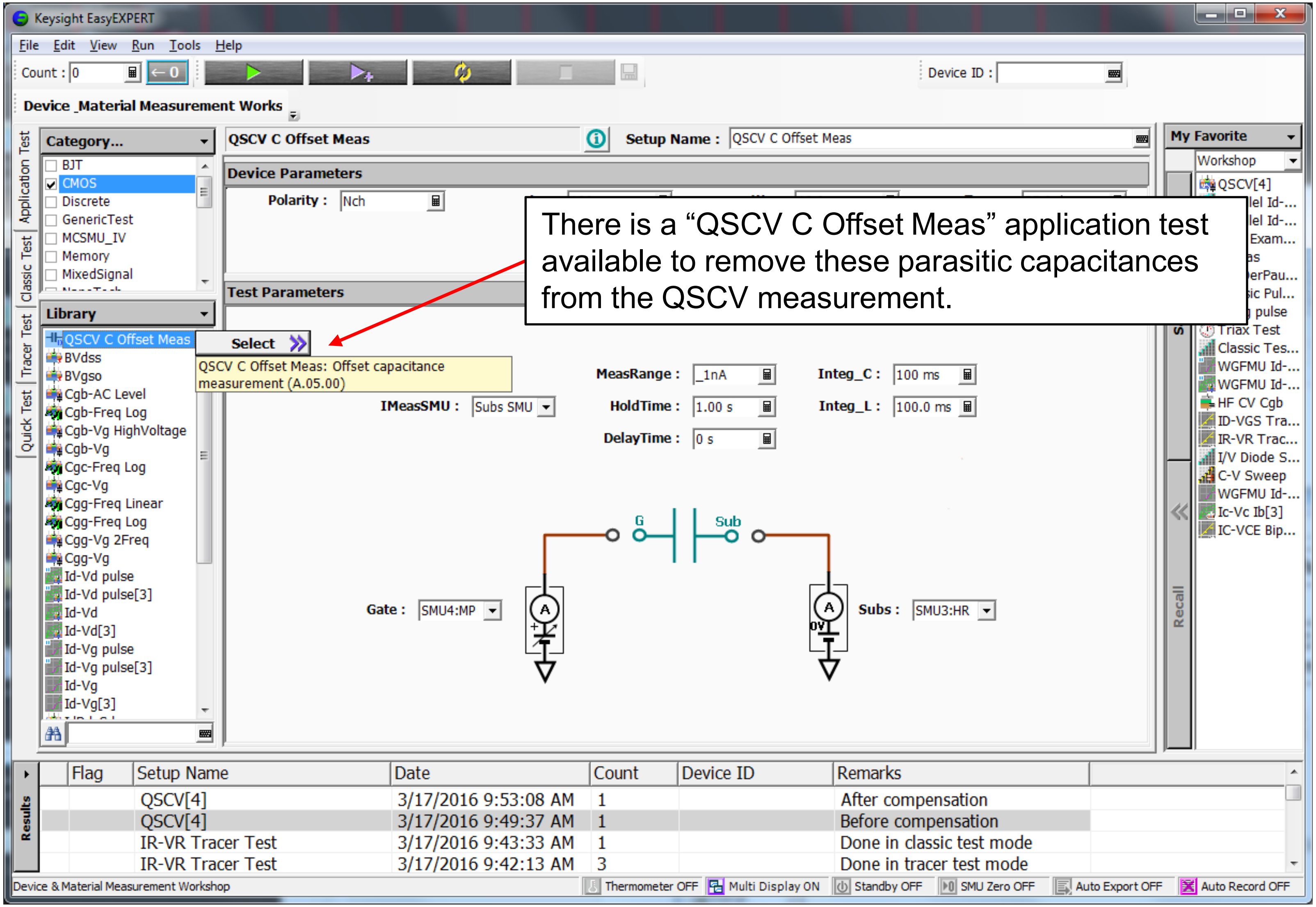

Count : 0

Device ID :

QSCV C Offset Meas — Setup Name : QSCV C Offset Meas

QSCV C Offset Meas: Offset capacitance measurement (A.05.00)

Polarity : Nch

IMeasSMU : Subs SMU

MeasRange : _1nA

HoldTime : 1.00 s

DelayTime : 0 s

Integ_C : 100 ms

Integ_L : 100.0 ms

Gate : SMU4:MP

Subs : SMU3:HR

Flag	Setup Name	Date	Count	Device ID	Remarks
	QSCV[4]	3/17/2016 9:53:08 AM	1		After compensation
	QSCV[4]	3/17/2016 9:49:37 AM	1		Before compensation
	IR-VR Tracer Test	3/17/2016 9:43:33 AM	1		Done in classic test mode
	IR-VR Tracer Test	3/17/2016 9:42:13 AM	3		Done in tracer test mode

There is a “QSCV C Offset Meas” application test available to remove these parasitic capacitances from the QSCV measurement.

QSCV Measurement: Effect of offset cancellation

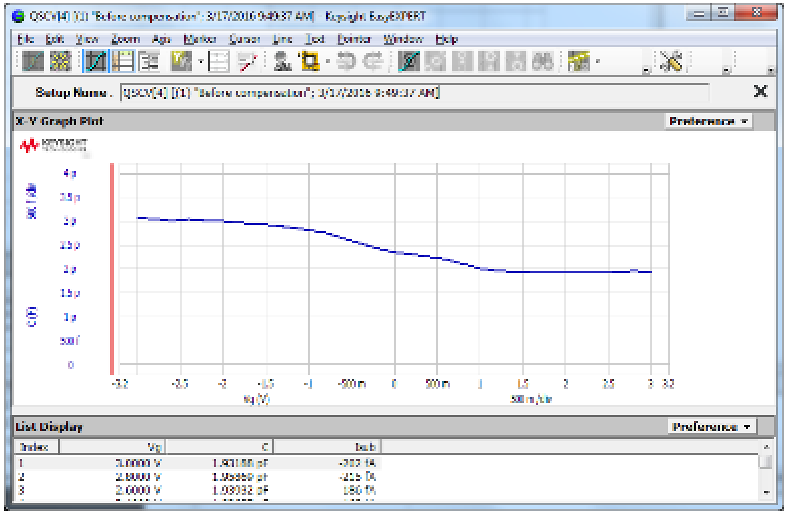

Setup Name : QSCV[4] [1] "Before compensation"; 3/17/2016 9:49:37 AM]

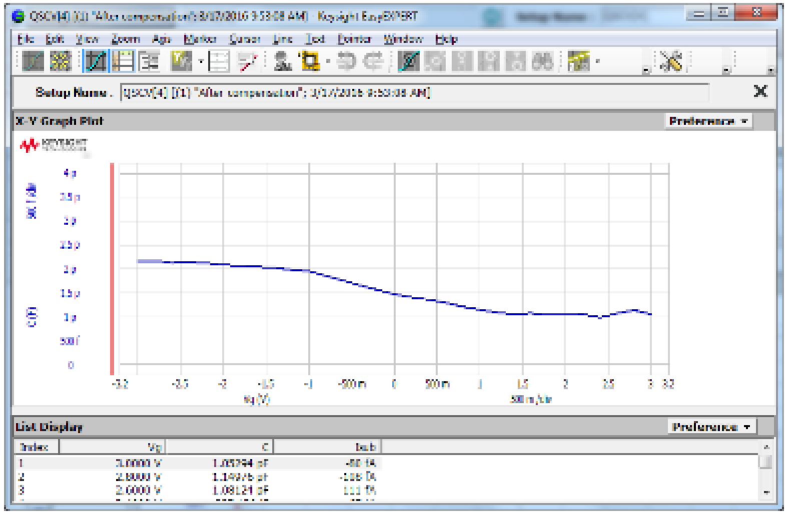

Setup Name : QSCV[4] [1] "After compensation"; 3/17/2016 9:53:08 AM]

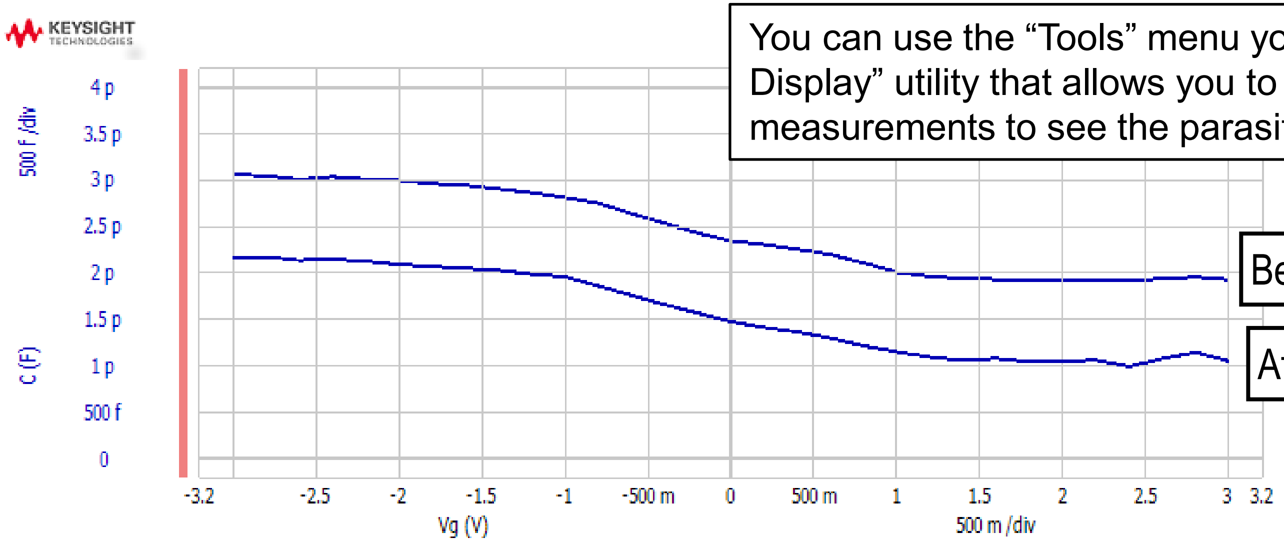

You can use the “Tools” menu you can find the “Data Display” utility that allows you to overlay the two measurements to see the parasitic capacitances.

Before offset cancellation.

After offset cancellation.

What Do Capacitance (LCR) Meters Measure?

- Capacitance meters measure two things: magnitude change and phase shift; each measurement therefore provides two pieces of information.
- Using this data and assuming a two-element model of some sort, the capacitance meter calculates values for the specified model (i.e. Cp-G, Cs-Rs, Lp-D, etc.).

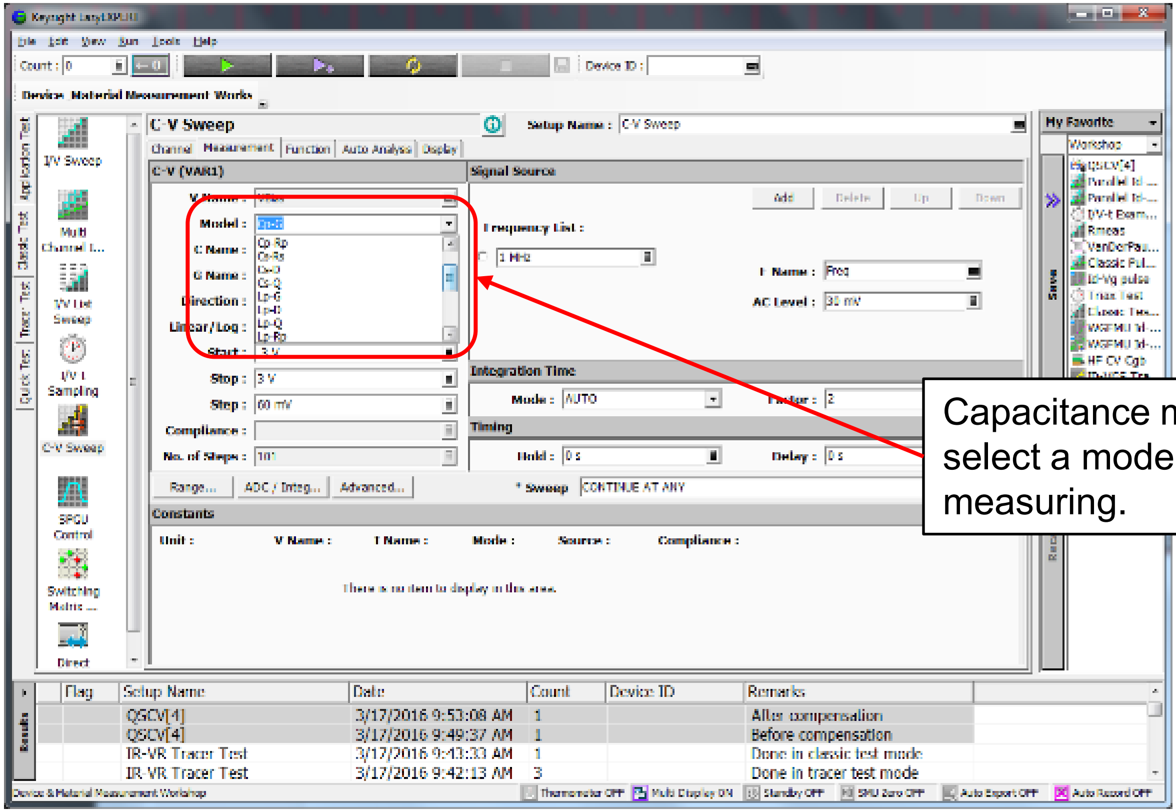

Count : 0

C-V Sweep

Setup Name : C-V Sweep

C-V (VAR1)

Model : Cp-G

Cp-Rp
Cs-Rs
Cs-D
Cs-Q
Lp-G
Lp-D
Lp-Q
Lp-Rp

Start : -3 V

Stop : 3 V

Step : 60 mV

Compliance :

No. of Steps : 101

Signal Source

Frequency List :

1 MHz

f Name : Freq

AC Level : 30 mV

Integration Time

Mode : AUTO

Factor : 2

Timing

Hold : 0 s

Delay : 0 s

* Sweep CONTINUE AT ANY

Constants

Unit : V Name : I Name : Mode : Source : Compliance :

There is no item to display in this area.

Flag	Setup Name	Date	Count	Device ID	Remarks
	QSCV[4]	3/17/2016 9:53:08 AM	1		After compensation
	QSCV[4]	3/17/2016 9:49:37 AM	1		Before compensation
	IR-VR Tracer Test	3/17/2016 9:43:33 AM	1		Done in classic test mode
	IR-VR Tracer Test	3/17/2016 9:42:13 AM	3		Done in tracer test mode

Device & Material Measurement Workshop

Capacitance meters/modules allow you to select a model for the device that you are measuring.

How Do Capacitance Meters Work?

Auto-Balancing Bridge Method

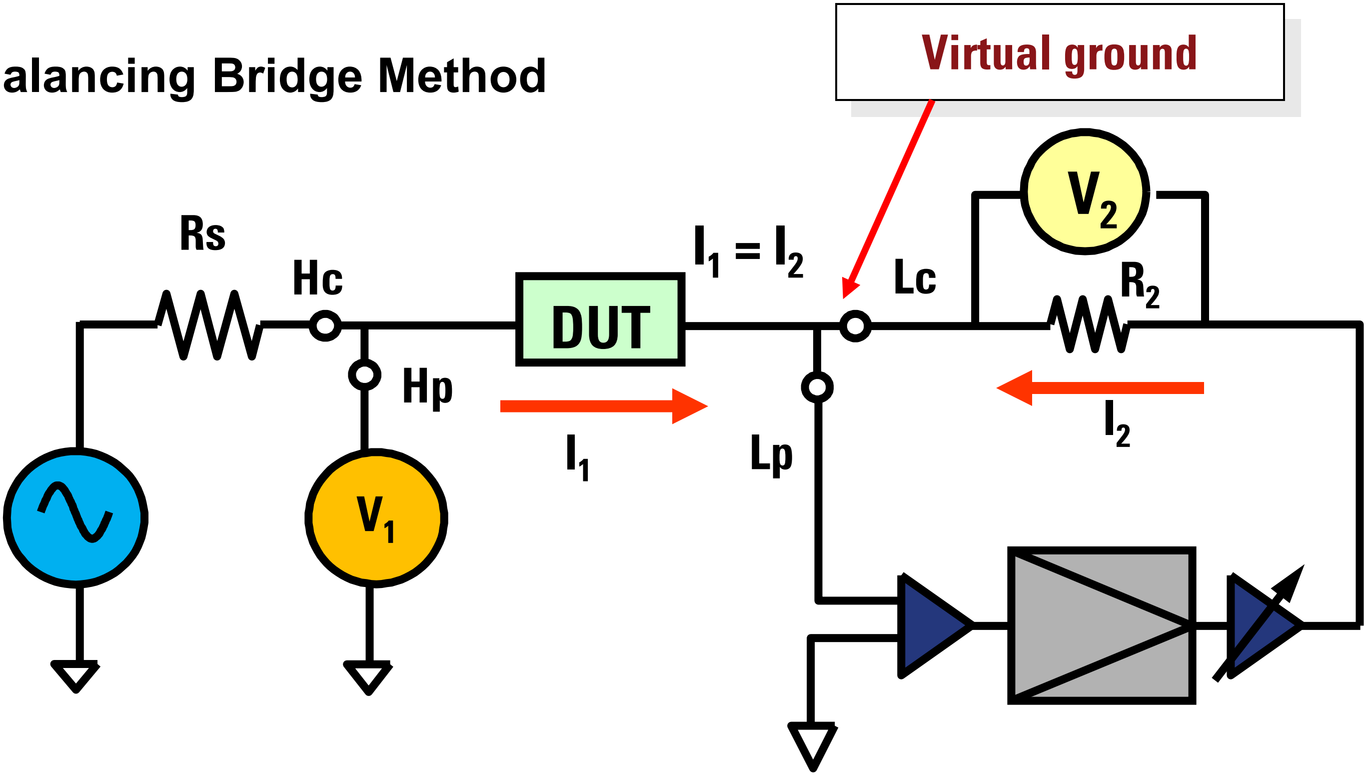

$$V_2 = I_2 \times R_2$$

$$Z = \frac{V_1}{I_2} = \frac{V_1 R_2}{V_2}$$

Important! Notice that the measurement is made at the Lp and Lc terminals.

Making Basic C-Meter Measurements in EasyExpert

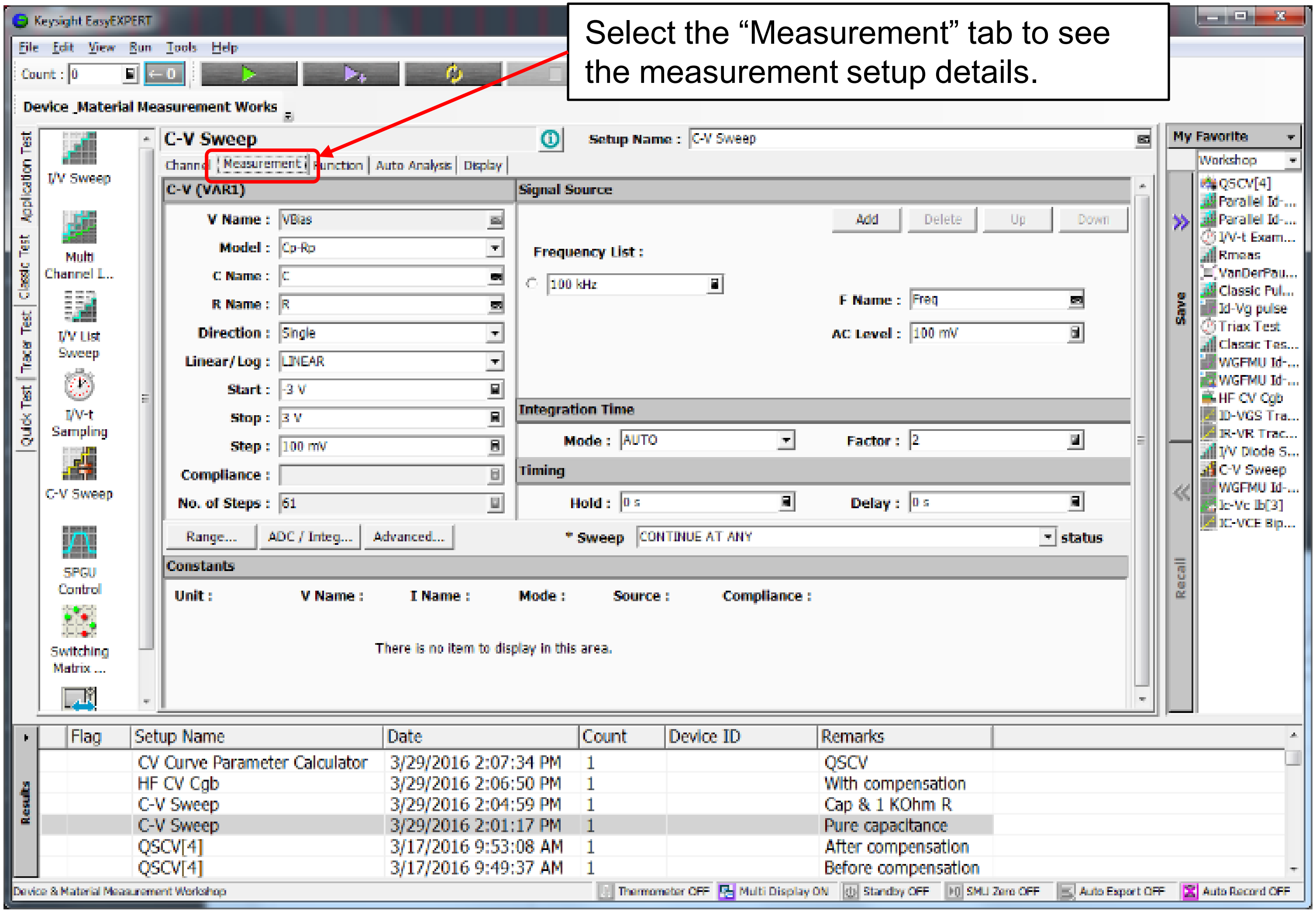

Select the “Measurement” tab to see the measurement setup details.

Setup Name : C-V Sweep

C-V (VAR1)

V Name : VBias
Model : Cp-Rp
C Name : C
R Name : R
Direction : Single
Linear/Log : LINEAR
Start : -3 V
Stop : 3 V
Step : 100 mV
Compliance :
No. of Steps : 61

Signal Source

Frequency List :
○ 100 kHz
F Name : Freq
AC Level : 100 mV

Integration Time

Mode : AUTO
Factor : 2

Timing

Hold : 0 s
Delay : 0 s

*** Sweep** CONTINUE AT ANY status

Constants

Unit :	V Name :	I Name :	Mode :	Source :	Compliance :

There is no item to display in this area.

Flag	Setup Name	Date	Count	Device ID	Remarks
	CV Curve Parameter Calculator	3/29/2016 2:07:34 PM	1		QSCV
	HF CV Cgb	3/29/2016 2:06:50 PM	1		With compensation
	C-V Sweep	3/29/2016 2:04:59 PM	1		Cap & 1 KOhm R
	C-V Sweep	3/29/2016 2:01:17 PM	1		Pure capacitance
	QSCV[4]	3/17/2016 9:53:08 AM	1		After compensation
	QSCV[4]	3/17/2016 9:49:37 AM	1		Before compensation

KEYSIGHT TECHNOLOGIES

Making Basic C-Meter Measurements – Discrete Cap.

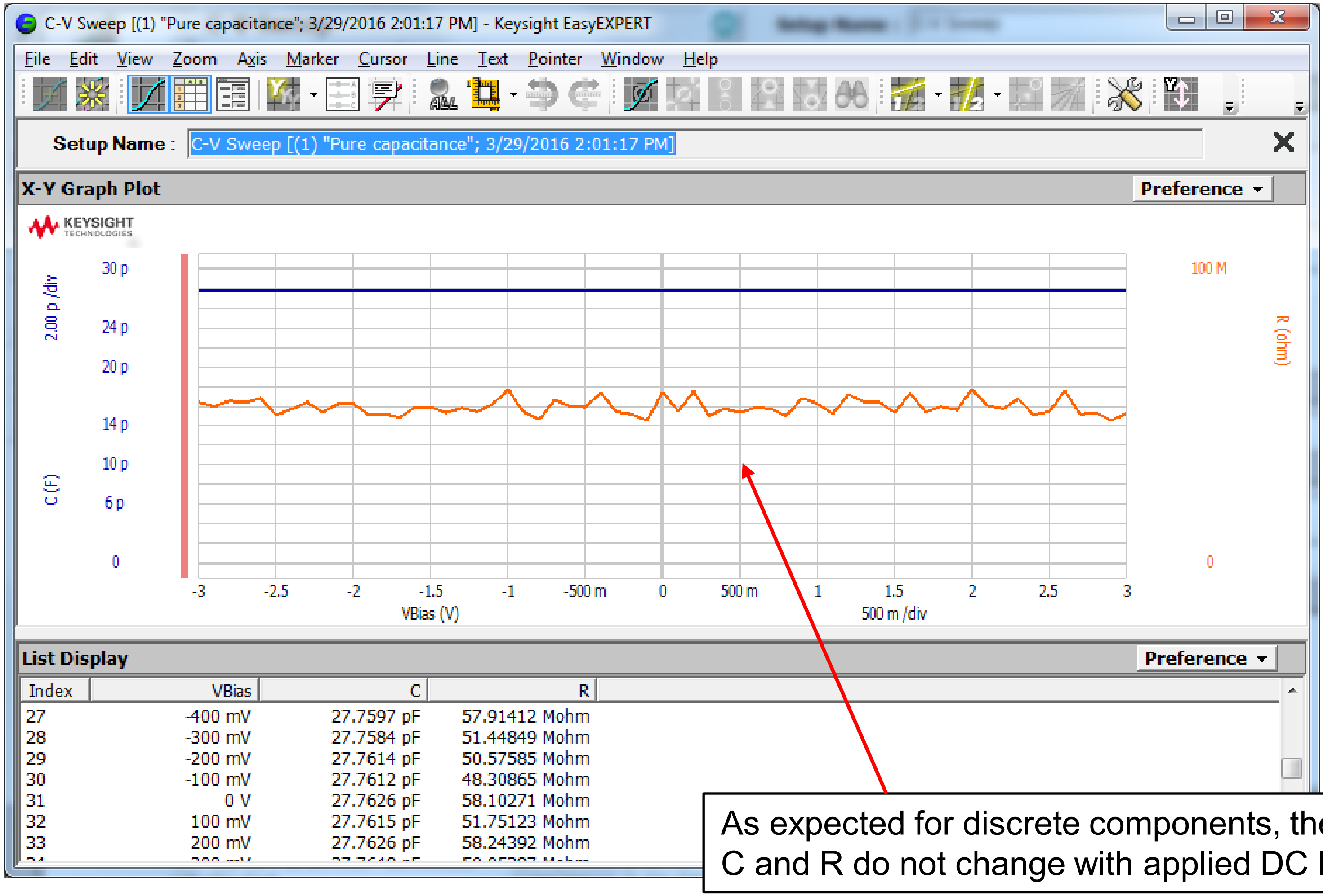

C-V Sweep [(1) "Pure capacitance"; 3/29/2016 2:01:17 PM] - Keysight EasyEXPERT

Setup Name : C-V Sweep [(1) "Pure capacitance"; 3/29/2016 2:01:17 PM]

X-Y Graph Plot

List Display

Index	VBias	C	R
27	-400 mV	27.7597 pF	57.91412 Mohm
28	-300 mV	27.7584 pF	51.44849 Mohm
29	-200 mV	27.7614 pF	50.57585 Mohm
30	-100 mV	27.7612 pF	48.30865 Mohm
31	0 V	27.7626 pF	58.10271 Mohm
32	100 mV	27.7615 pF	51.75123 Mohm
33	200 mV	27.7626 pF	58.24392 Mohm

As expected for discrete components, the values of C and R do not change with applied DC bias.

Four Terminal Pair (4TP) Measurement Method

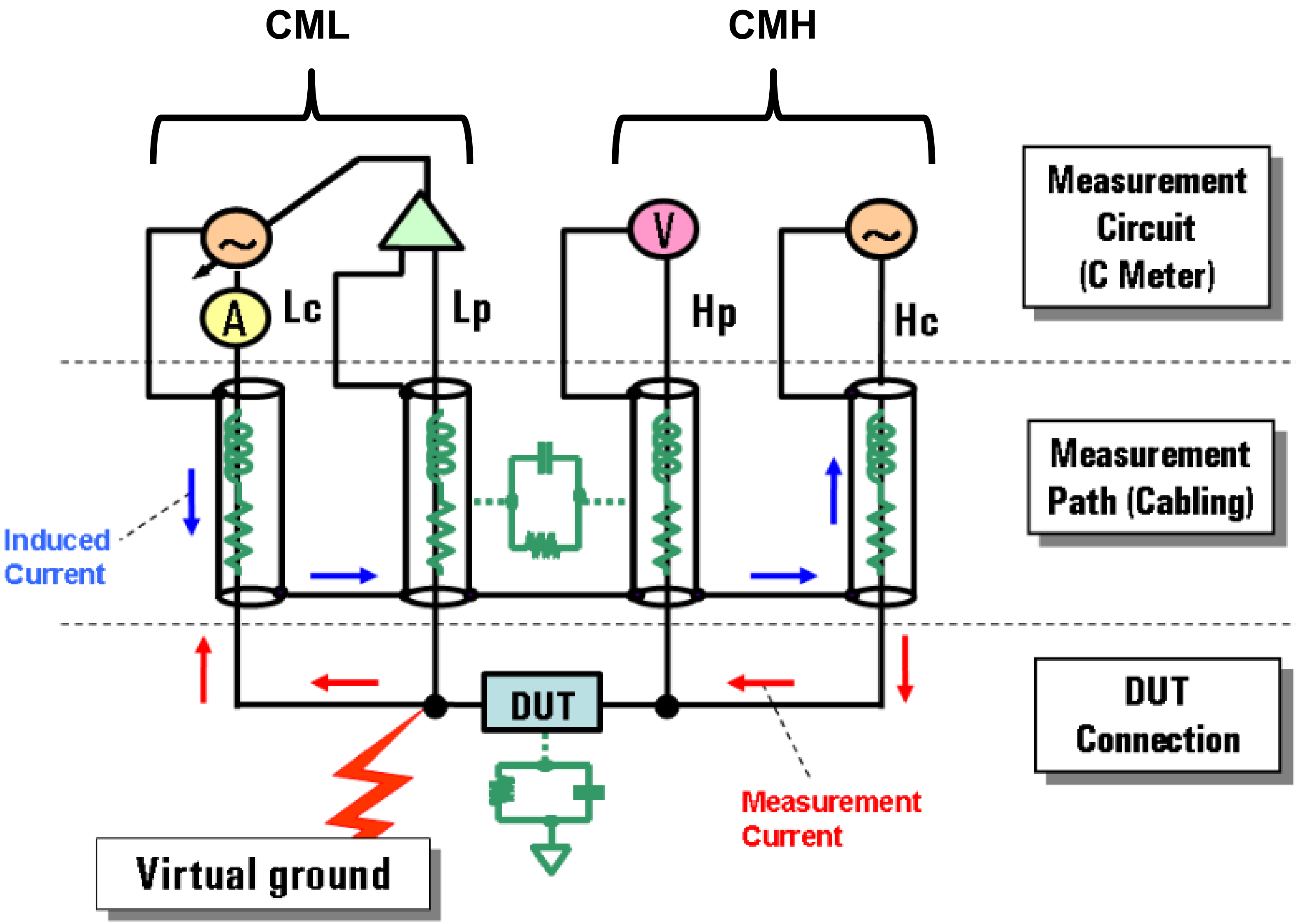

Proper Way to Connect Up the Four Terminal Pair

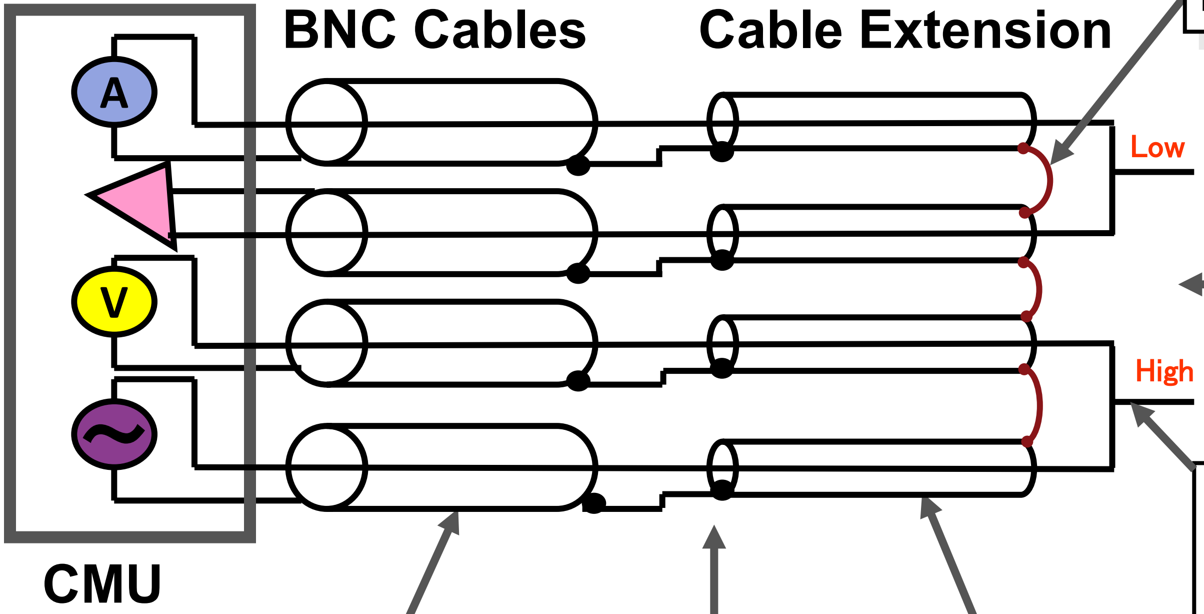

Connect the outer shield as near as possible to the DUT

Open/Short/Load calibration must be performed

Make the length after terminating the 4 terminal pair as short as possible (under 10 cm)

Use cables provided by Keysight Technologies

Make cable extension as short as possible

Isolate (float) the outer shield from ground

Why is it important to short the outer guard shields together?

Shorting the outer shields together close to the DUT provides a current return path, stabilizes the series inductance of the cables, and prevents oscillations.

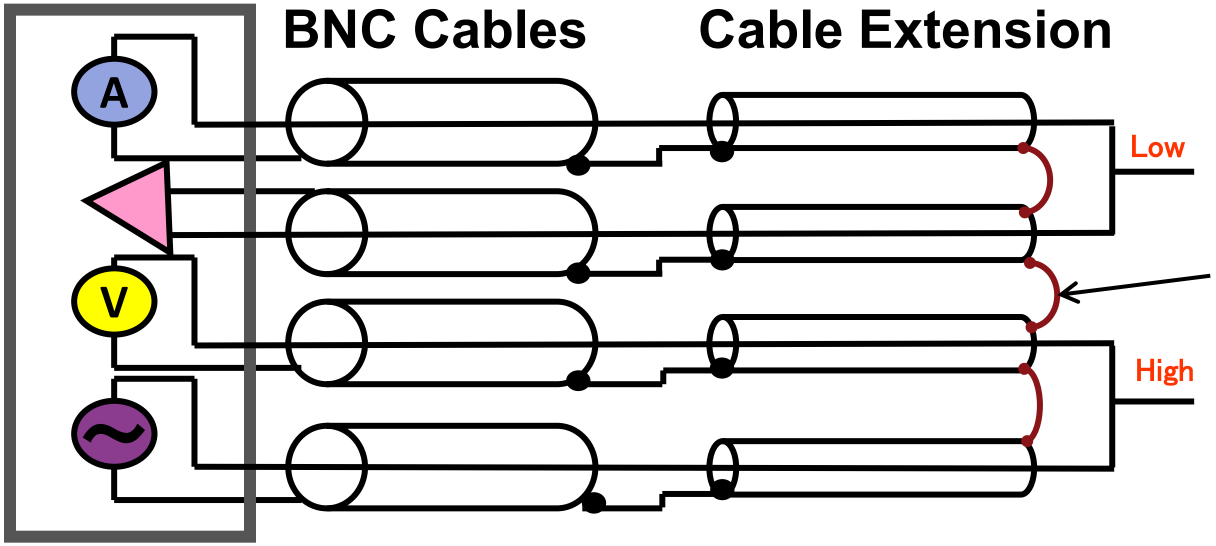

Short the shields together as close to the DUT as possible.

Another Benefit of Shorting the Guards: Eliminating Resonant Frequency Oscillation On-Wafer

When parallel resonance occurs during measurement, shorting the guard cables together will resolve the problem.

Note that the parallel resonance may occur even if a BNC-SSMC cable is used.

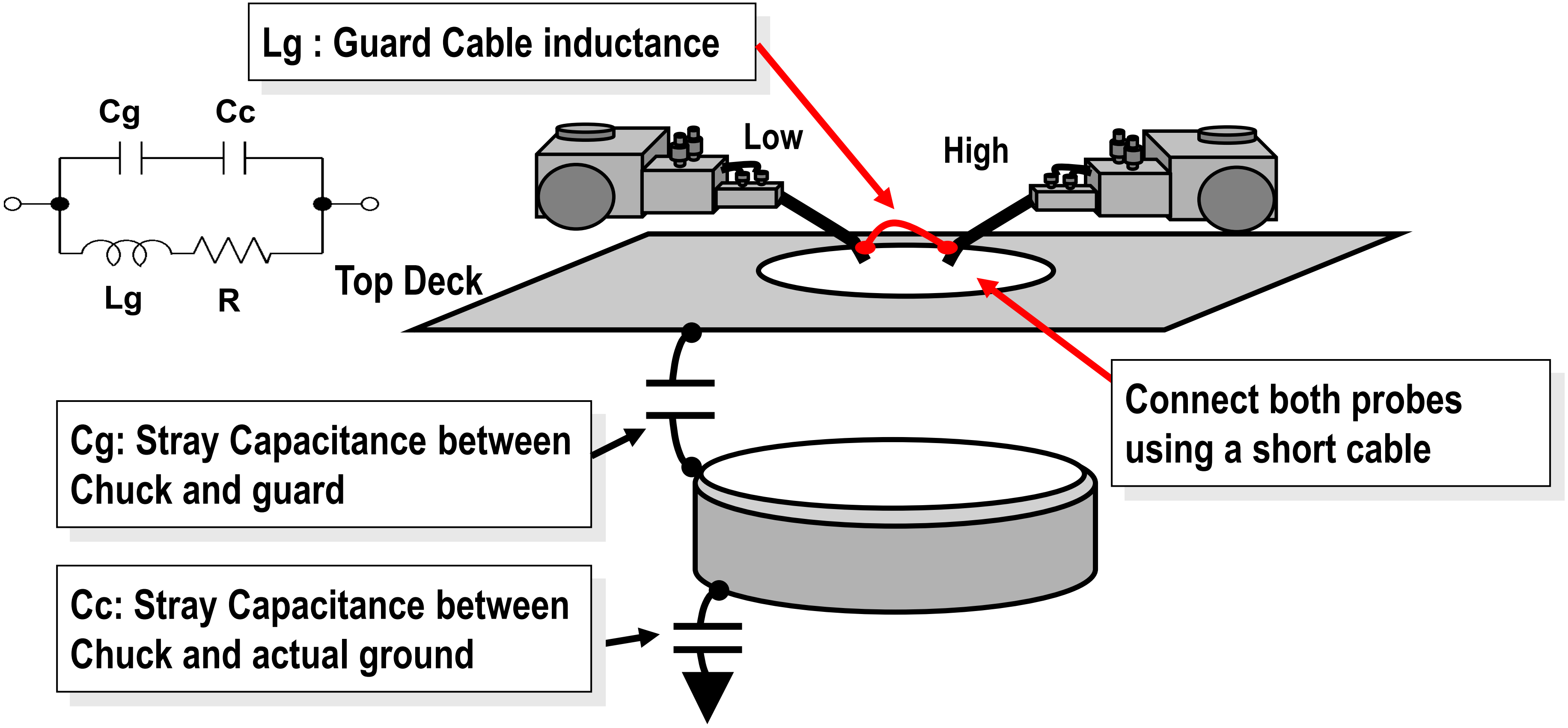

Lg : Guard Cable inductance

Cg: Stray Capacitance between Chuck and guard

Cc: Stray Capacitance between Chuck and actual ground

Connect both probes using a short cable

SMUs are Triaxial & C-Meters are Coaxial – The SCUU Provides a Way to Switch Easily Between Them

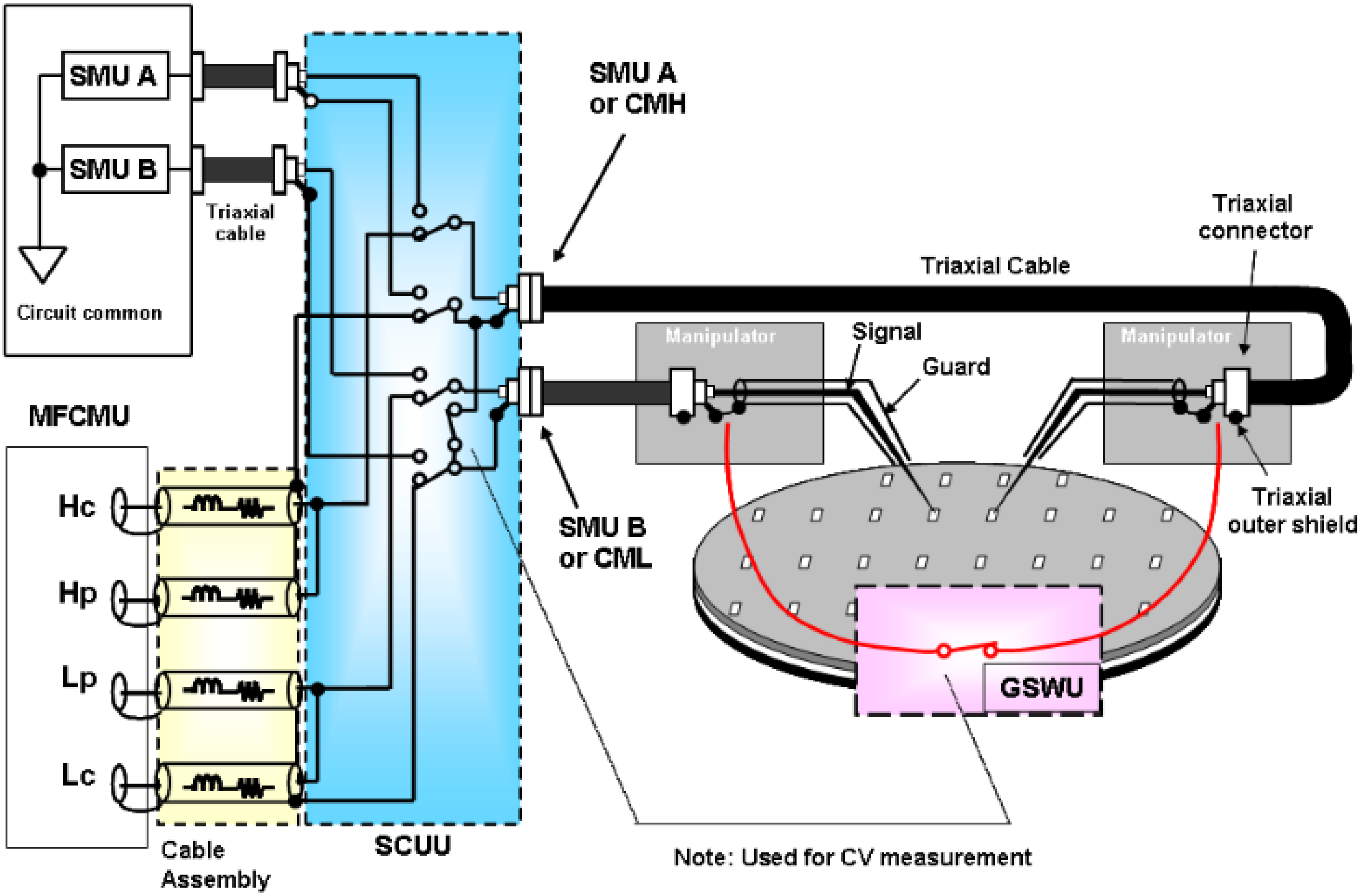

Accuracy improvement by Guard Switch Unit (GSWU)

- Reduce the residual inductance of the measurement cable
- Stabilize the residual inductance when measurement cable distance is changed (moved)

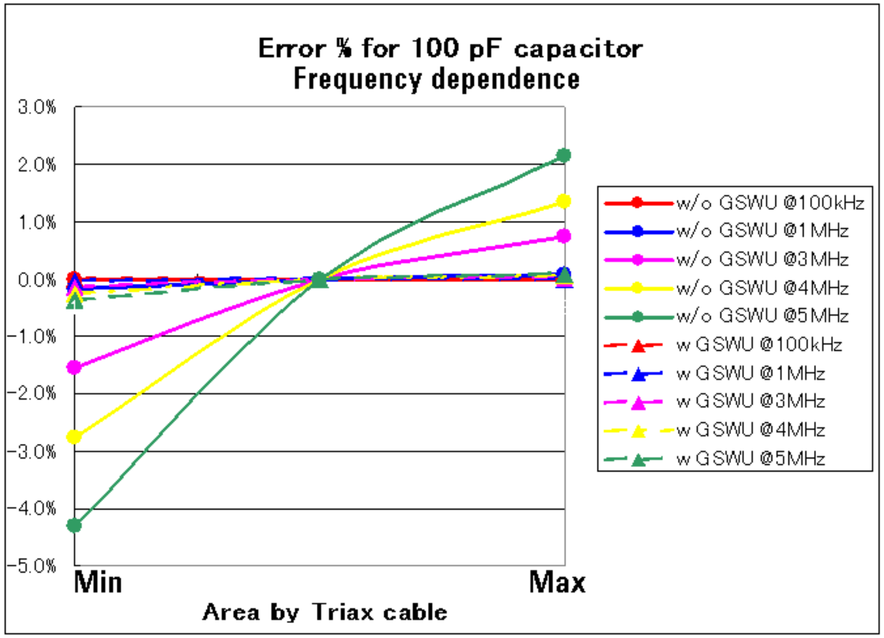

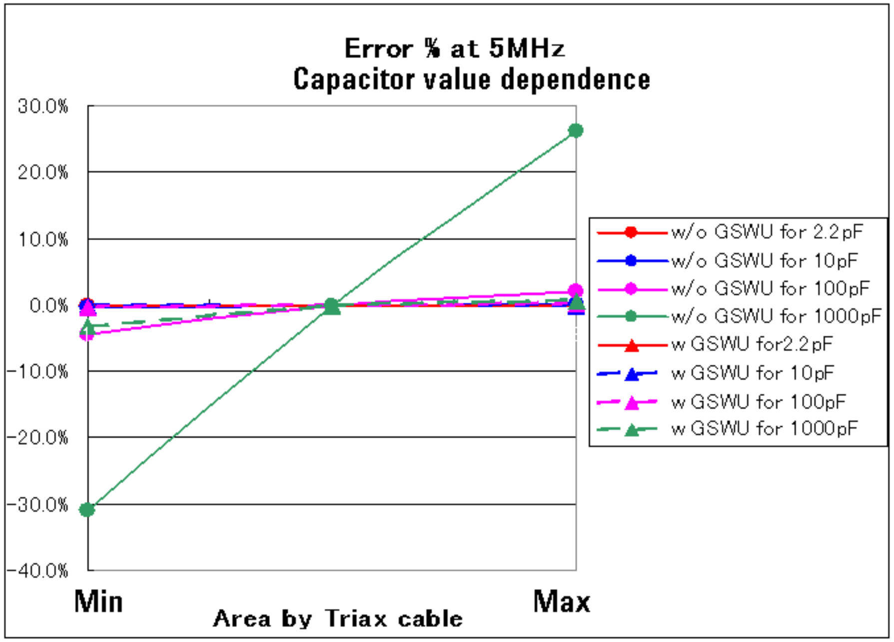

Proper Wafer Prober Connections for SCUU

Note: The SCUU should be mounted on the wafer prober close to the positioners to keep the additional cable lengths as short as possible.

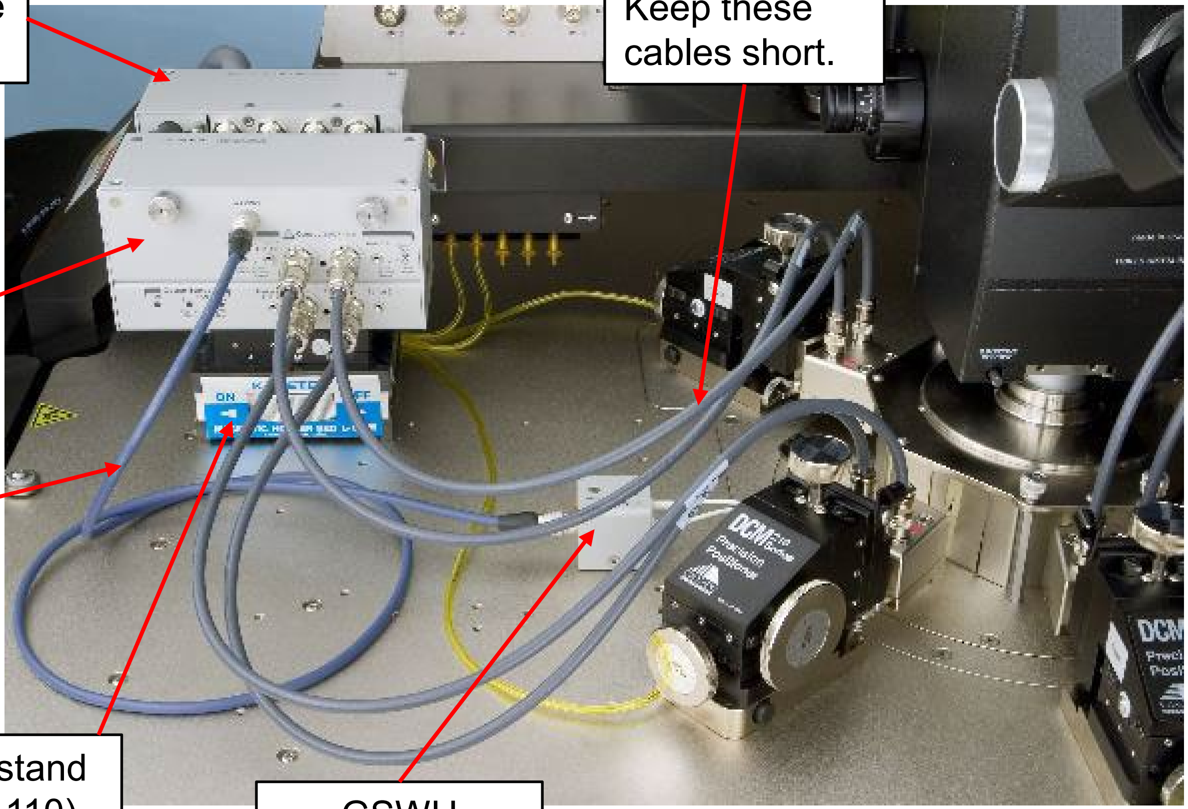

3m SCUU Cable
(N1301A-102)

Keep these cables short.

SCUU
(N1301A-100)

GSWU Cable
(N1301A-201/202)

Magnetic stand
(N1301A-110)

GSWU
(N1301A-200)

Importance of Proper CML and CMH Connections for On-Wafer Measurements

Why does placing the CMH terminal on the chuck and the CML terminal on the DUT improve CV measurement results?

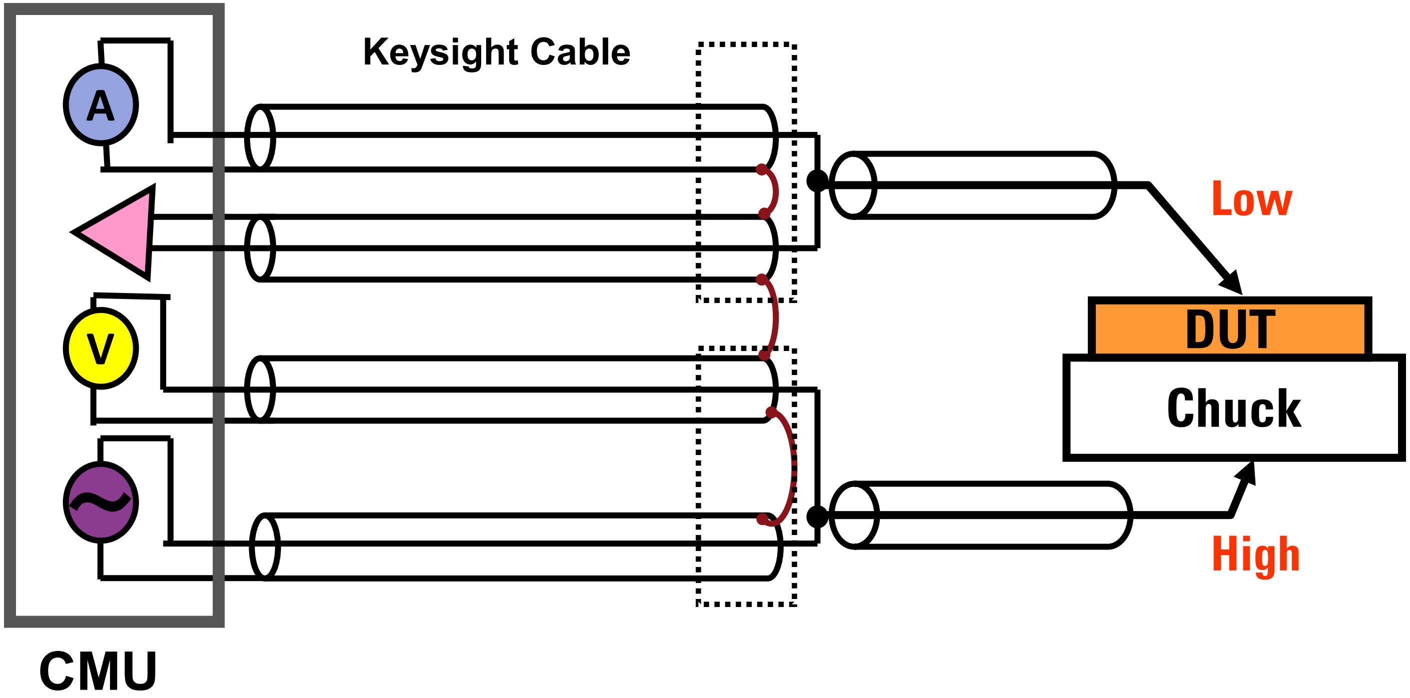

Connecting CMH and CML on a Wafer Prober

CMH connected to DUT;
CML connected to chuck.
Error! – Some of the current leaks through the chuck and is not measured by the CMU.

CMH connected to chuck;
CML connected to DUT.
No Error – All current flowing through the DUT is measured by the CMU.

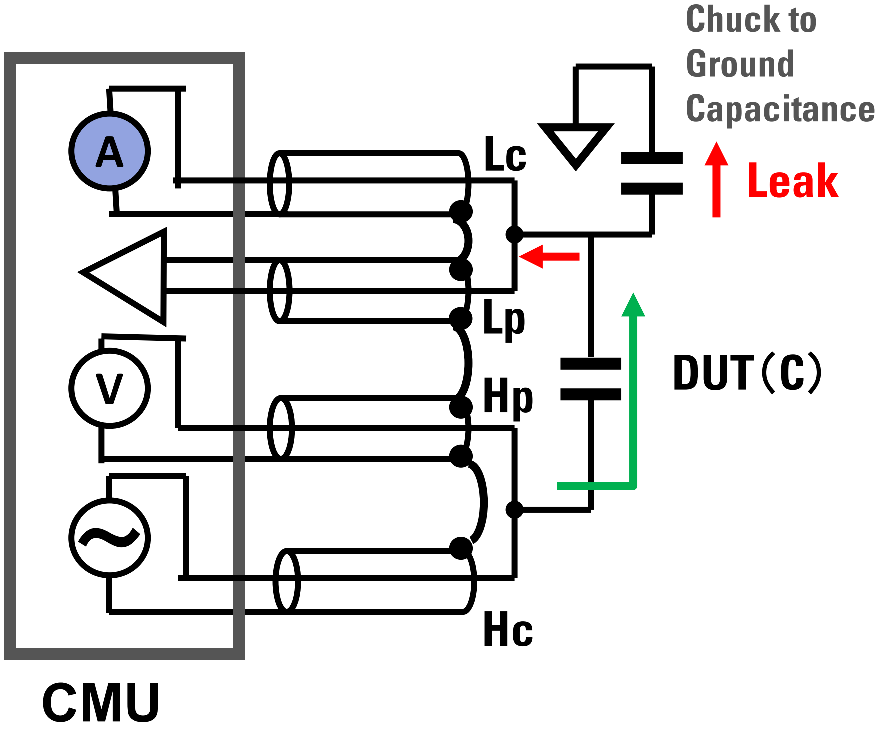

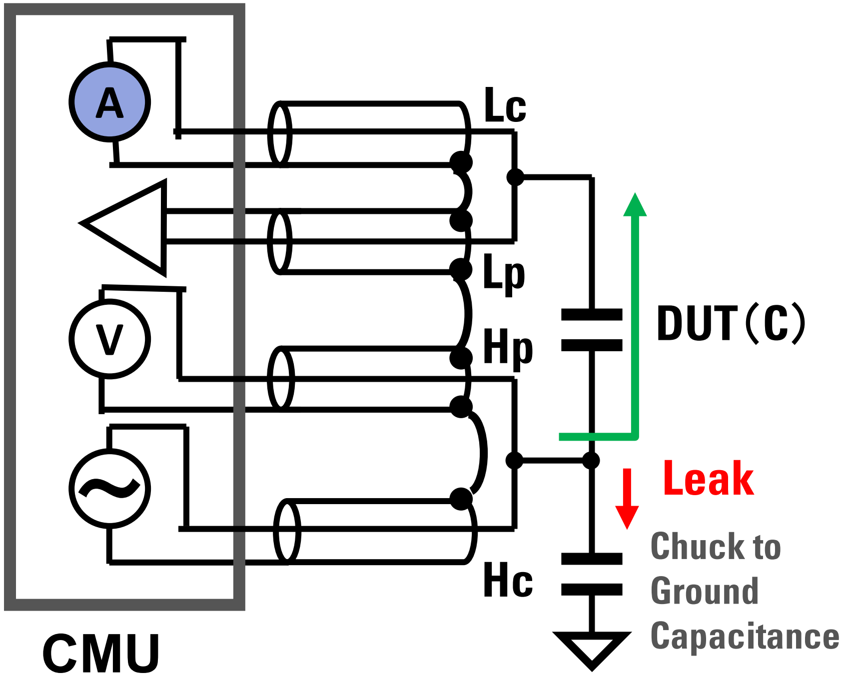

Importance of OPEN/SHORT/LOAD Calibration

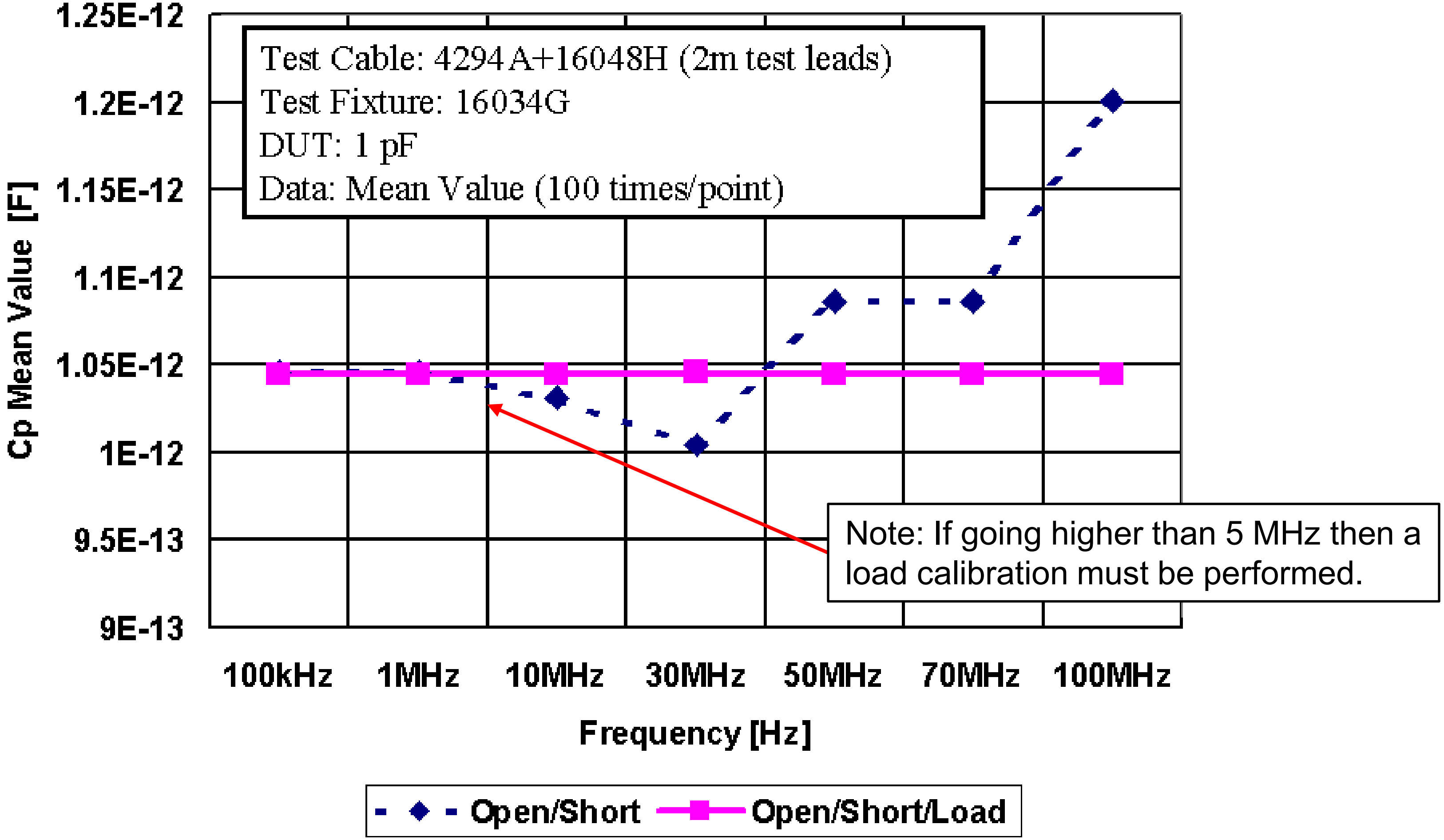

Note: If going higher than 5 MHz then a load calibration must be performed.

Another Issue: Noise Generated by the Chuck

- ✓ Noise collected by the chuck is injected directly into the ammeter
- ✓ Measurement results become noisy
- ✓ This effect can unbalance the meter's bridge circuitry

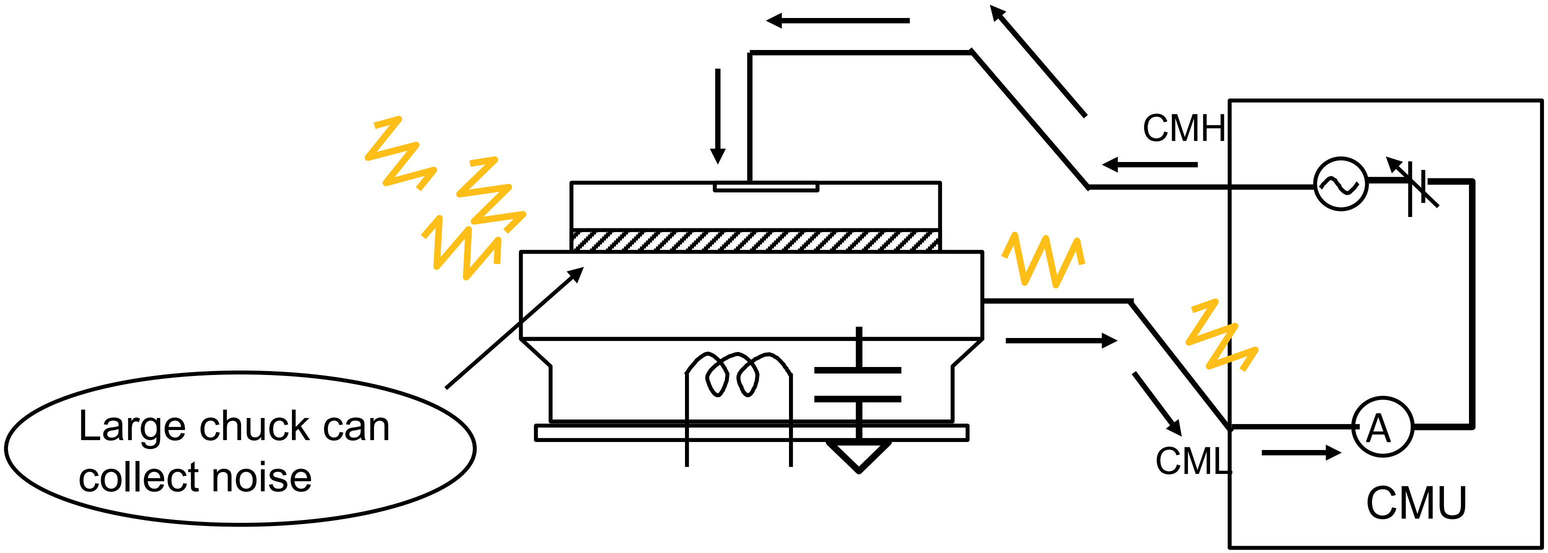

Large chuck can collect noise

Data Showing Benefit of Connecting CMH to Wafer Chuck (Bulk in this Case)

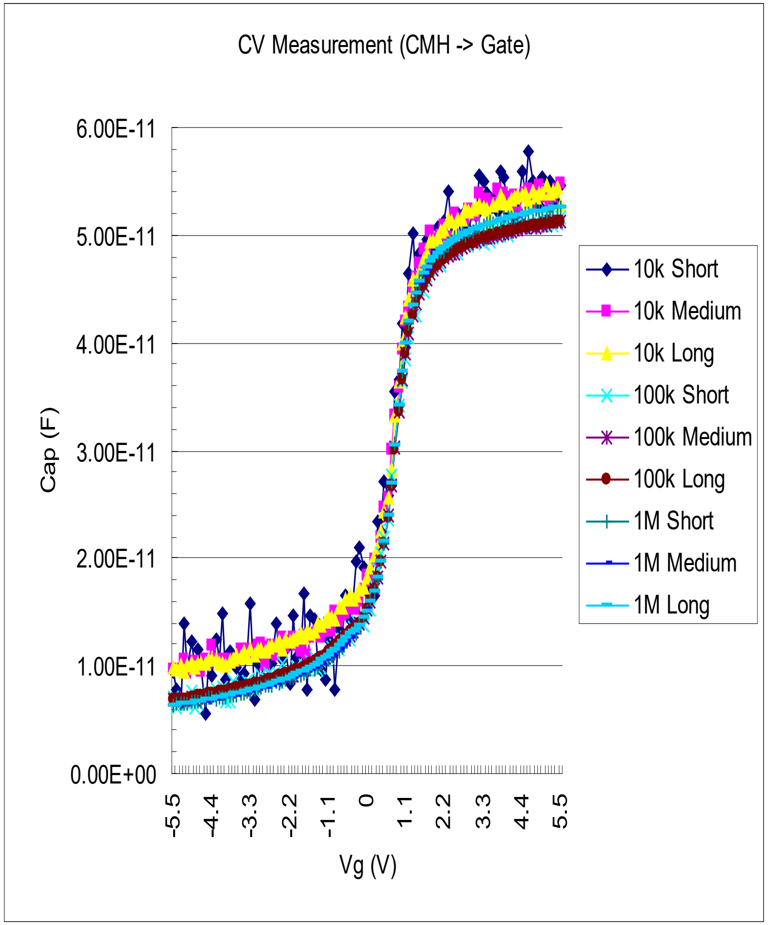

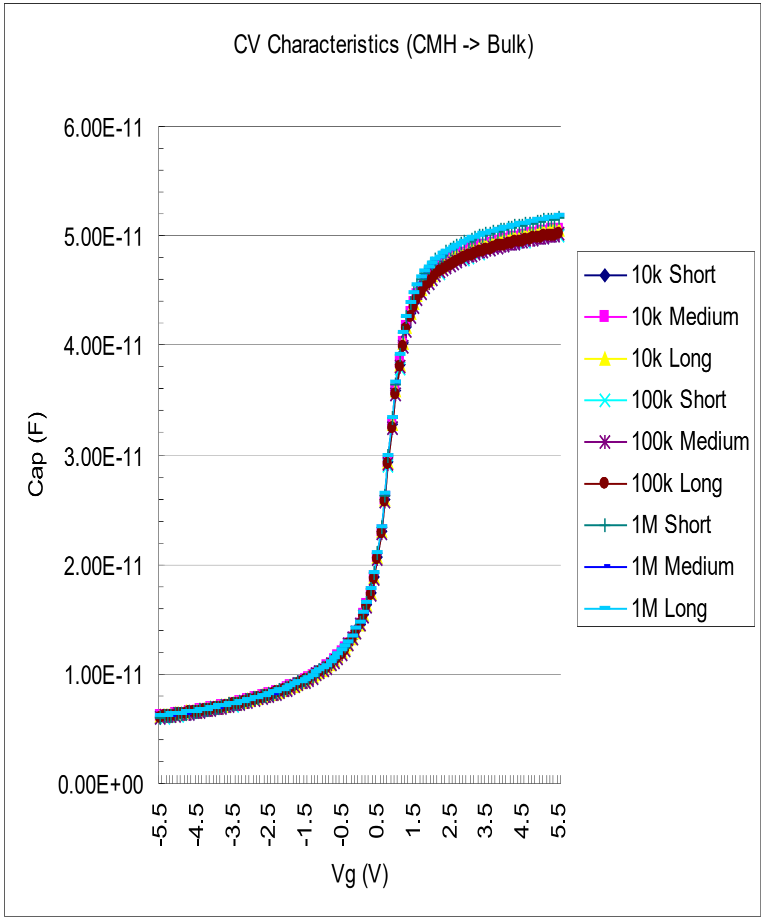

General Comment on Capacitance Application Tests

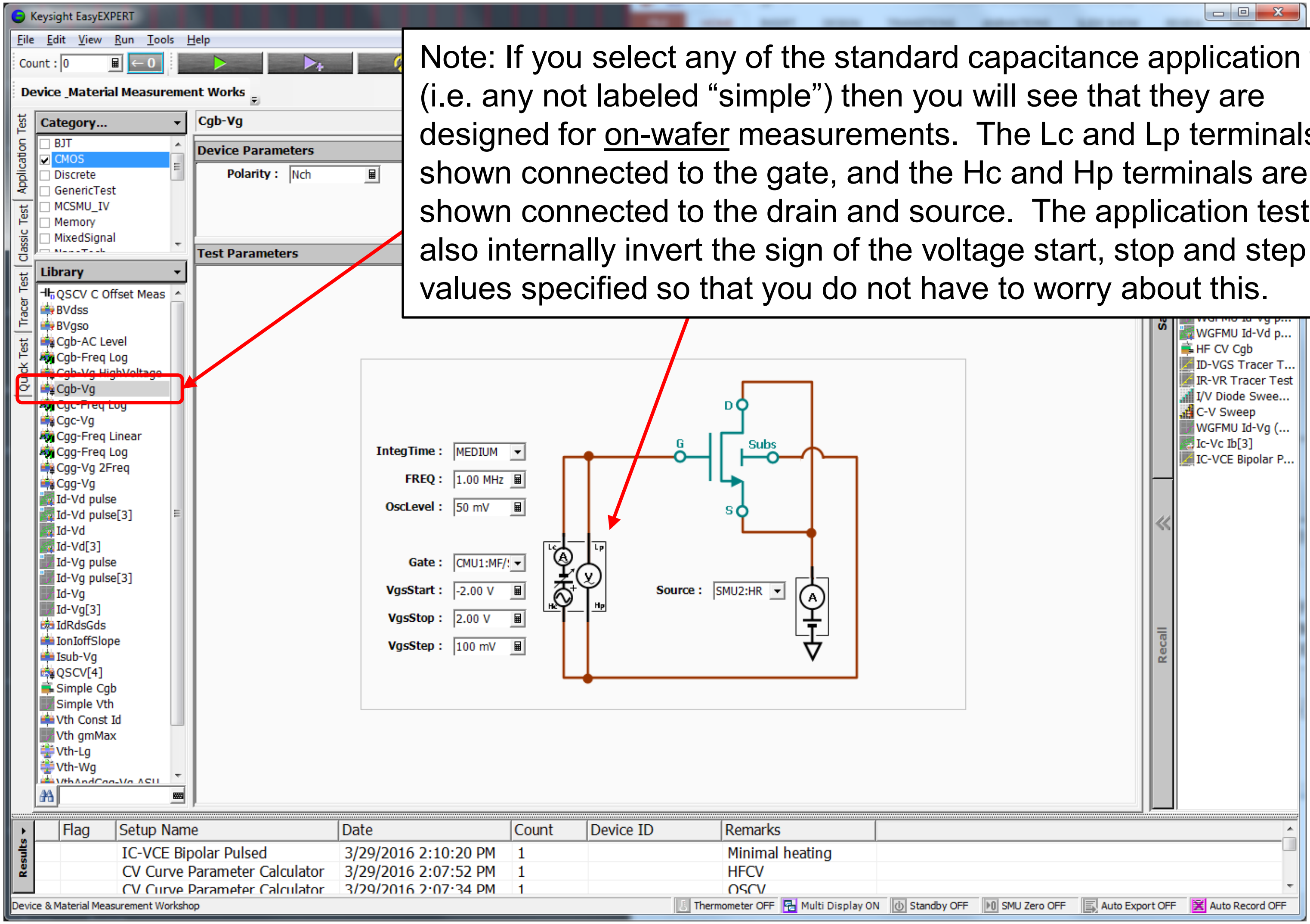

Polarity : Nch

IntegTime : MEDIUM

FREQ : 1.00 MHz

OscLevel : 50 mV

Gate : CMU1:MF/

VgsStart : -2.00 V

VgsStop : 2.00 V

VgsStep : 100 mV

Source : SMU2:HR

Flag	Setup Name	Date	Count	Device ID	Remarks
	IC-VCE Bipolar Pulsed	3/29/2016 2:10:20 PM	1		Minimal heating
	CV Curve Parameter Calculator	3/29/2016 2:07:52 PM	1		HFCV
	CV Curve Parameter Calculator	3/29/2016 2:07:34 PM	1		QSCV

Device & Material Measurement Workshop

Note: If you select any of the standard capacitance application tests (i.e. any not labeled "simple") then you will see that they are designed for on-wafer measurements. The Lc and Lp terminals are shown connected to the gate, and the Hc and Hp terminals are shown connected to the drain and source. The application tests also internally invert the sign of the voltage start, stop and step values specified so that you do not have to worry about this.

HFCV CMOS Measurement vs QSCV Measurement

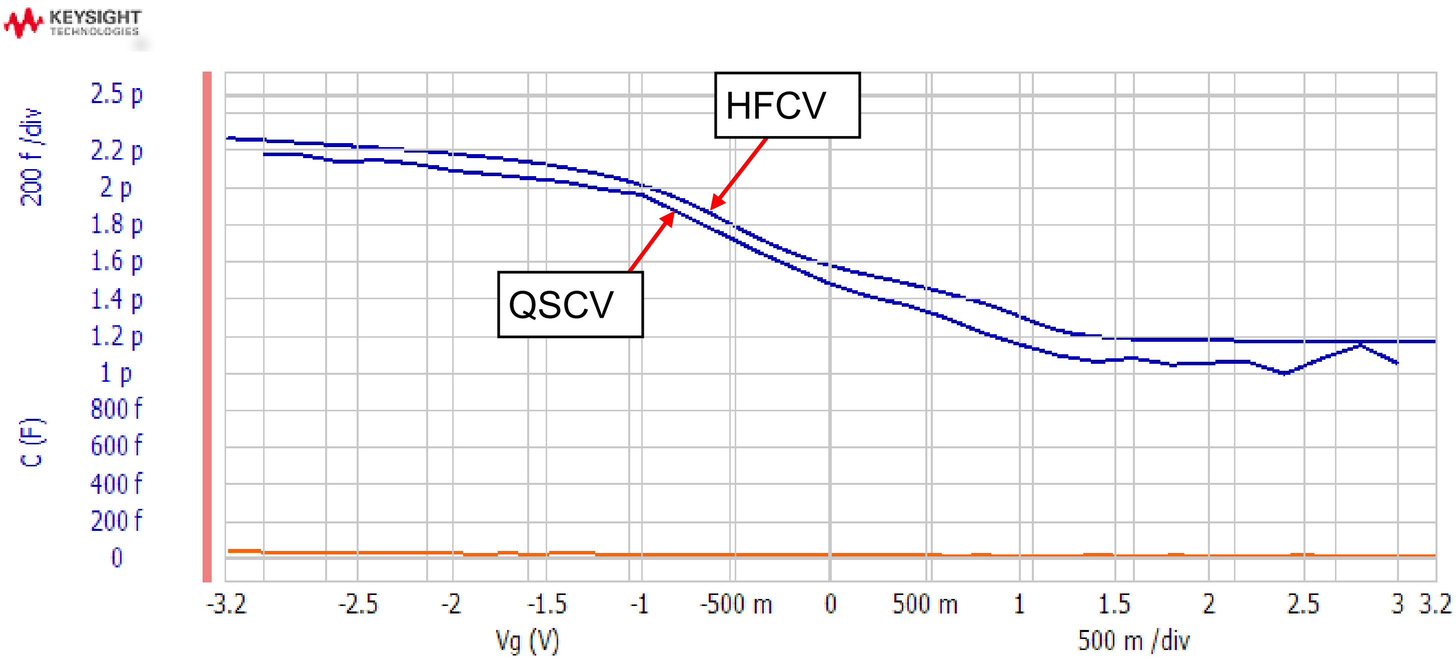

You can see that we have relatively good agreement between the two capacitance measurement techniques.

Note: It is hard to get good agreement using test fixtures. On-wafer measurements generally yield better results because the cabling is more rigid and the fixturing more stable.

Calculating Parameters from Capacitance Curves - 1

$$\text{Tox} = \frac{A \cdot 10^{8} \cdot \varepsilon_0 \cdot \varepsilon_d}{\text{Cox}} \text{ [angstroms]}$$

For Cox = 9.122×10^{-10} F,

Tox = 37.08 [angstroms]

Where

A = 0.001 cm^2

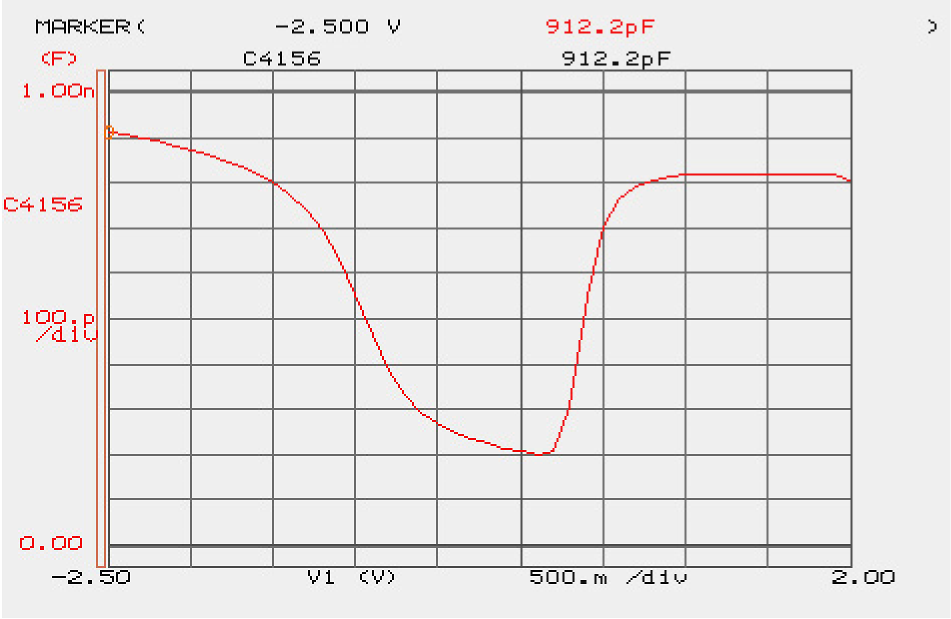

Calculating Parameters from Capacitance Curves - 2

$$\mathrm{Nsub} = \frac{4 \cdot |\Phi_f|}{q \cdot \varepsilon_0 \cdot \varepsilon_{Si}} \left(\frac{Cs_{min}}{A} \right)^2$$

Must (iteratively) solve two equations in two unknowns!

$$\Phi_f = \pm \frac{kT}{q} \cdot \ln \left(\frac{\mathrm{Nsub}}{n_i} \right) \quad \text{[volts]}$$

+ : p-type (NMOS)
- : n-type (PMOS)

For $Cs_{min} = 2.01 \times 10^{-10}$ F,

$\Phi_f = 0.4490$ V
Nsub = 4.3724×10^{17} [1/cm^3]

Where
A = 0.001 cm^2 and T = 296 deg K

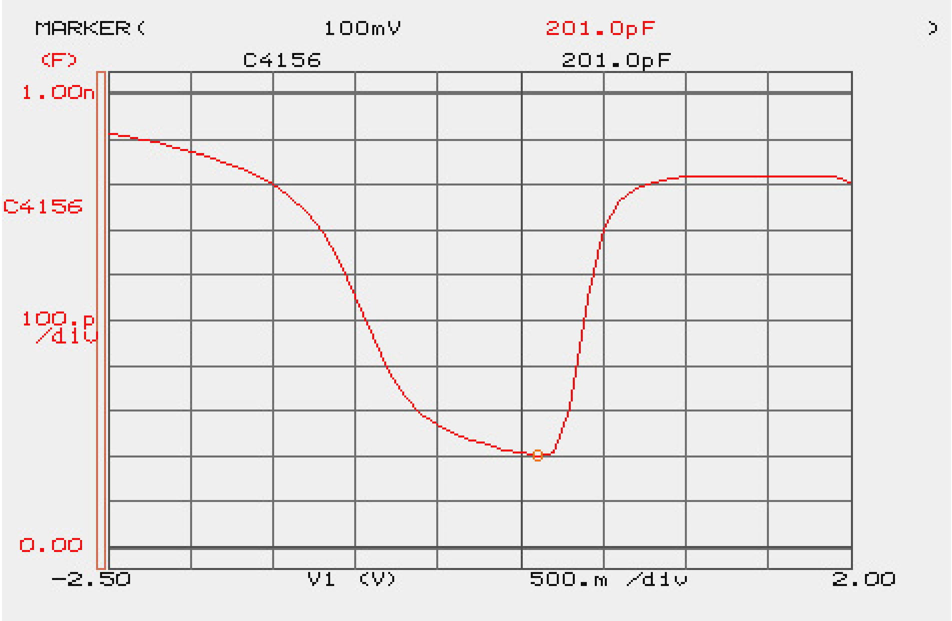

Calculating Parameters from Capacitance Curves - 3

$$\lambda = \sqrt{\frac{2k \cdot T \cdot \varepsilon_0 \cdot \varepsilon_{Si}}{q^2 \cdot Nsub}}$$

$$Cfb = \frac{Cox \cdot Csfb}{Cox + Csfb}$$

$$Csfb = \frac{\sqrt{2} \cdot A \cdot \varepsilon_0 \cdot \varepsilon_{Si}}{\lambda}$$

Using the value of Nsub obtained in the previous slide, we obtain the following:

$Csfb = 1.6869 \times 10^{-9}$ [F]
$Cfb \ \ = 5.9205 \times 10^{-10}$ [F]

The value of Vfb is then determined graphically to be -1.0506 V.

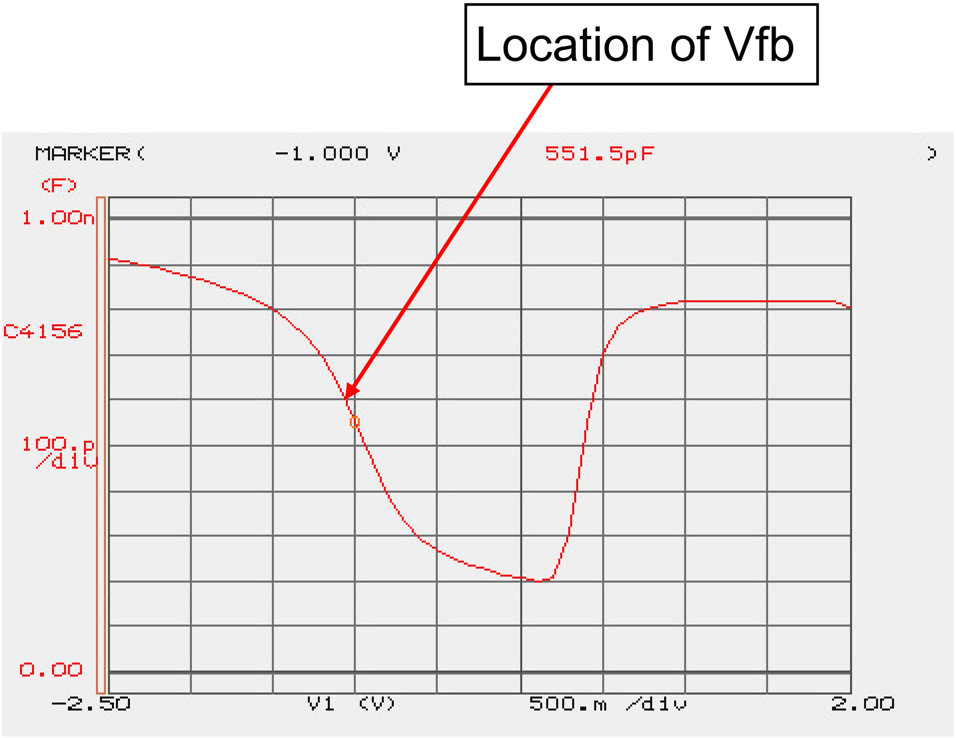
Location of Vfb

Calculating Parameters from Capacitance Curves - 4

$$Qss/q = \frac{Cox}{q \cdot A} \left| \Phi_{MS} - Vfb \right| \quad [1/cm^3]$$

In this example

$\Phi_f \quad = 0.4490$ V

$\Phi_{MS} \quad = -0.6 - \Phi_f \; = \; -1.049$ V

Therefore,

$Qss/q = 9.3375 \times 10^9$ $[1/cm^3]$

Calculating Parameters from Capacitance Curves - 5

$$Q_b = \pm q \cdot Nsub \cdot \frac{A \cdot \varepsilon_0 \cdot \varepsilon_{Si}}{Cs_{min}} \quad [C/cm^2]$$

+ : n-type (PMOS)
- : p-type (NMOS)

$$Vth = Vfb + \left(2 \cdot \Phi_f - \frac{A \cdot Q_b}{Cox} \right) \quad [volts]$$

In this example,

Q_b = -3.610 x 10^{-7} [Coulomb/cm^2]

Vth = 0.2431 [volts]

Calculating CV Parameters - 1

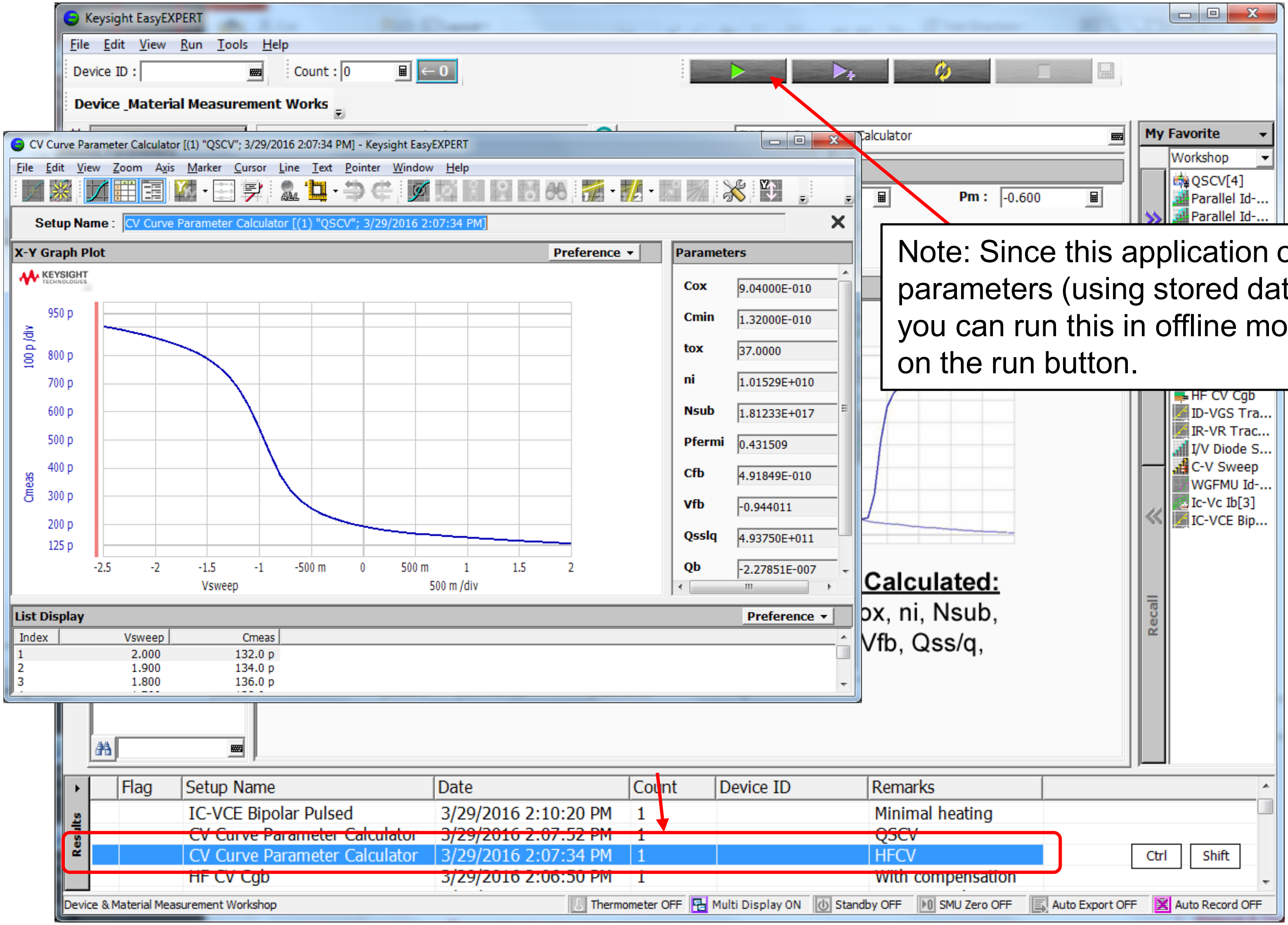

Keysight EasyEXPERT

CV Curve Parameter Calculator [(1) "QSCV"; 3/29/2016 2:07:34 PM] - Keysight EasyEXPERT

Setup Name : CV Curve Parameter Calculator [(1) "QSCV"; 3/29/2016 2:07:34 PM]

Device ID :

Count : 0

Pm : -0.600

Parameters

Cox	9.04000E-010
Cmin	1.32000E-010
tox	37.0000
ni	1.01529E+010
Nsub	1.81233E+017
Pfermi	0.431509
Cfb	4.91849E-010
Vfb	-0.944011
Qsslq	4.93750E+011
Qb	-2.27851E-007

List Display

Index	Vsweep	Cmeas
1	2.000	132.0 p
2	1.900	134.0 p
3	1.800	136.0 p

Flag	Setup Name	Date	Count	Device ID	Remarks
	IC-VCE Bipolar Pulsed	3/29/2016 2:10:20 PM	1		Minimal heating
	CV Curve Parameter Calculator	3/29/2016 2:07:52 PM	1		QSCV
	CV Curve Parameter Calculator	3/29/2016 2:07:34 PM	1		HFCV
	HF CV Cgb	3/29/2016 2:06:50 PM	1		With compensation

Device & Material Measurement Workshop | Thermometer OFF | Multi Display ON | Standby OFF | SMU Zero OFF | Auto Export OFF | Auto Record OFF

Calculated:
ox, ni, Nsub,
Vfb, Qss/q,

Note: Since this application only calculates parameters (using stored data in this case) you can run this in offline mode by clicking on the run button.

Calculating CV Parameters - 2

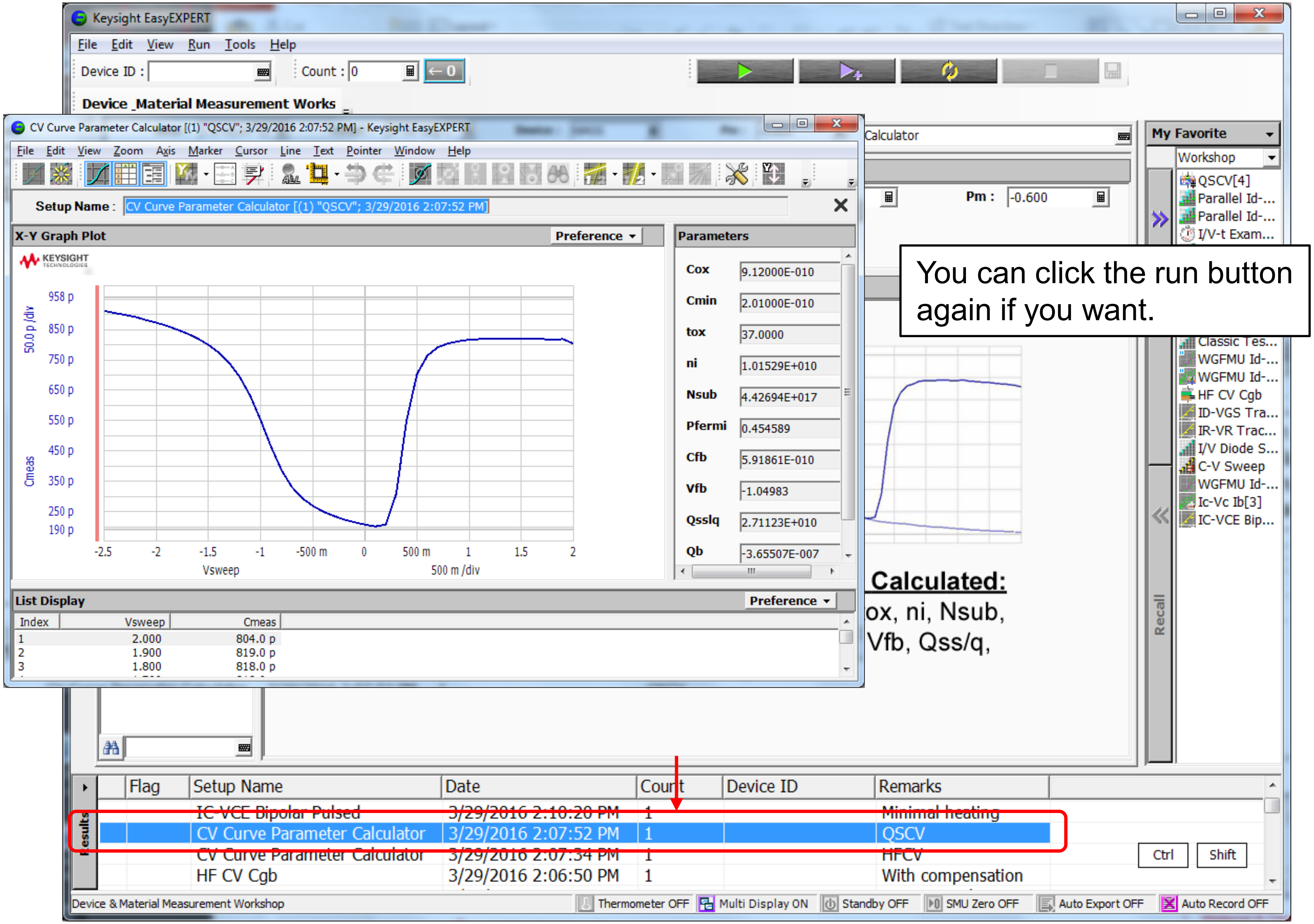

Device ID :

Count : 0

Calculator

Pm : -0.600

Setup Name : CV Curve Parameter Calculator [(1) "QSCV"; 3/29/2016 2:07:52 PM]

Parameters

Cox	9.12000E-010
Cmin	2.01000E-010
tox	37.0000
ni	1.01529E+010
Nsub	4.42694E+017
Pfermi	0.454589
Cfb	5.91861E-010
Vfb	-1.04983
Qsslq	2.71123E+010
Qb	-3.65507E-007

Index	Vsweep	Cmeas
1	2.000	804.0 p
2	1.900	819.0 p
3	1.800	818.0 p

You can click the run button again if you want.

Calculated:
ox, ni, Nsub,
Vfb, Qss/q,

Flag	Setup Name	Date	Count	Device ID	Remarks
	IC-VCE Bipolar Pulsed	3/29/2016 2:10:20 PM	1		Minimal heating
	CV Curve Parameter Calculator	3/29/2016 2:07:52 PM	1		QSCV
	CV Curve Parameter Calculator	3/29/2016 2:07:34 PM	1		HFCV
	HF CV Cgb	3/29/2016 2:06:50 PM	1		With compensation

Device & Material Measurement Workshop | Thermometer OFF | Multi Display ON | Standby OFF | SMU Zero OFF | Auto Export OFF | Auto Record OFF

Calculating CV Parameters - 3

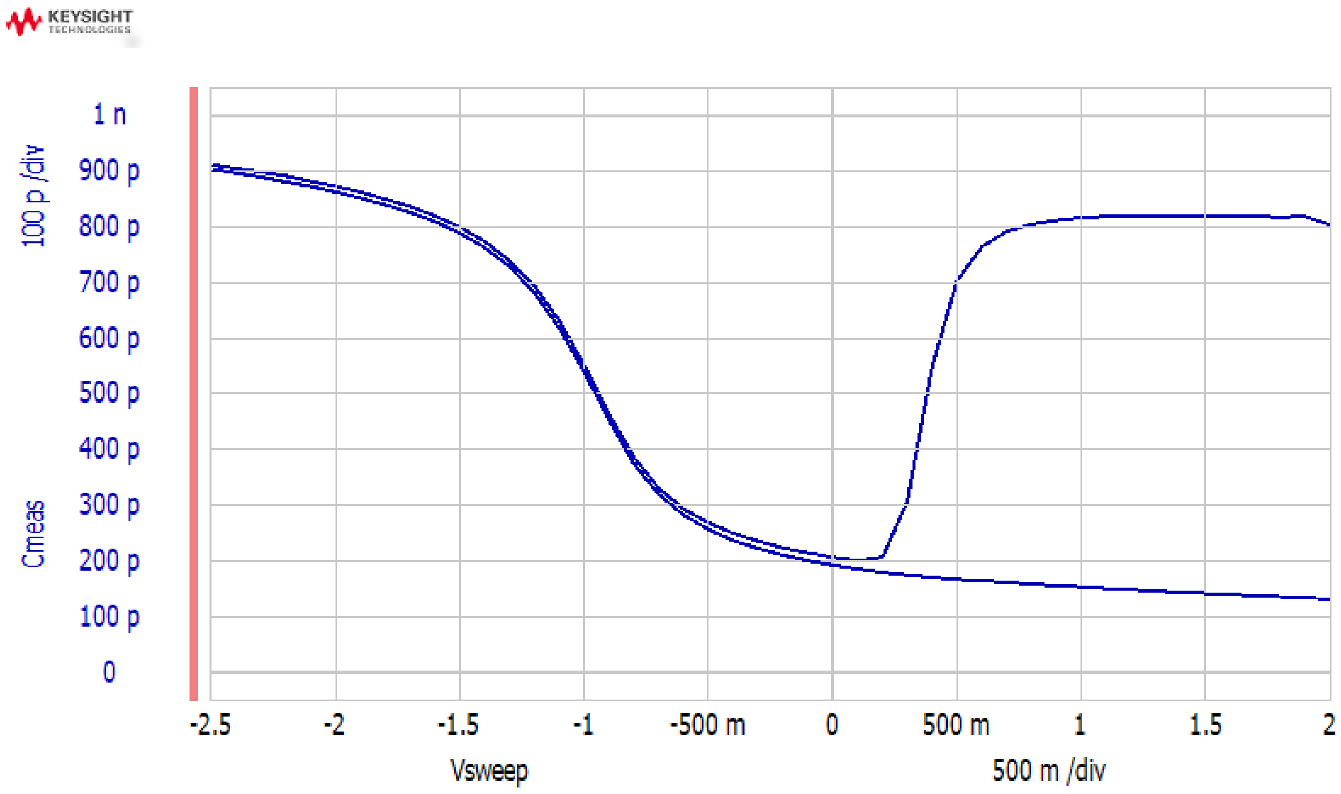

Note that if we overlay the HFCV and QSCV data from these test records (which was taken on-wafer) we have extremely good agreement between the two curves.

Thin Gate Dielectrics Present Additional Measurement Challenges

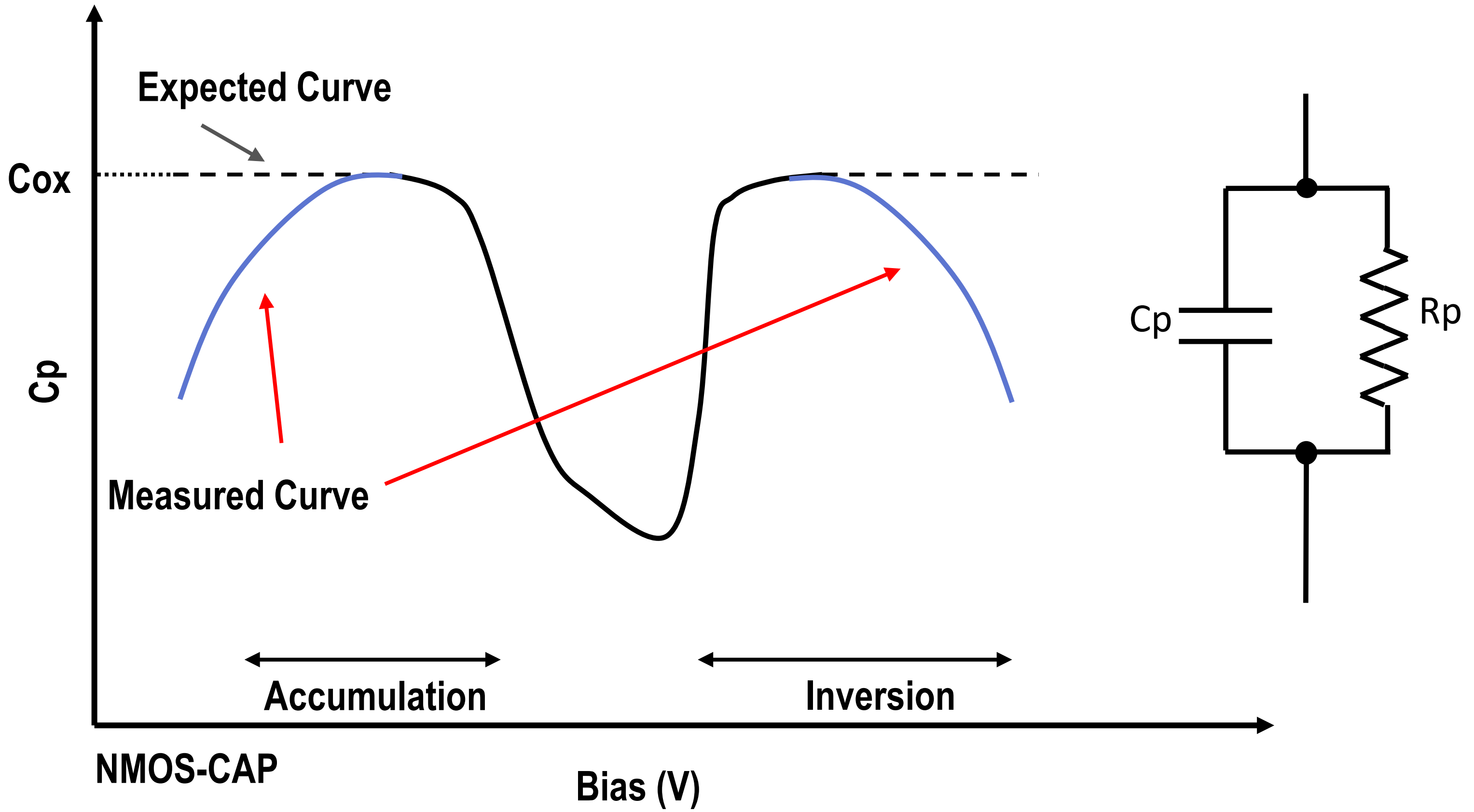

The measured capacitance decreases at high bias regions.

The Equivalent Circuit Model for Thin Gate Dielectrics

The leakage current due to electron tunneling is modeled as a parallel resistance.

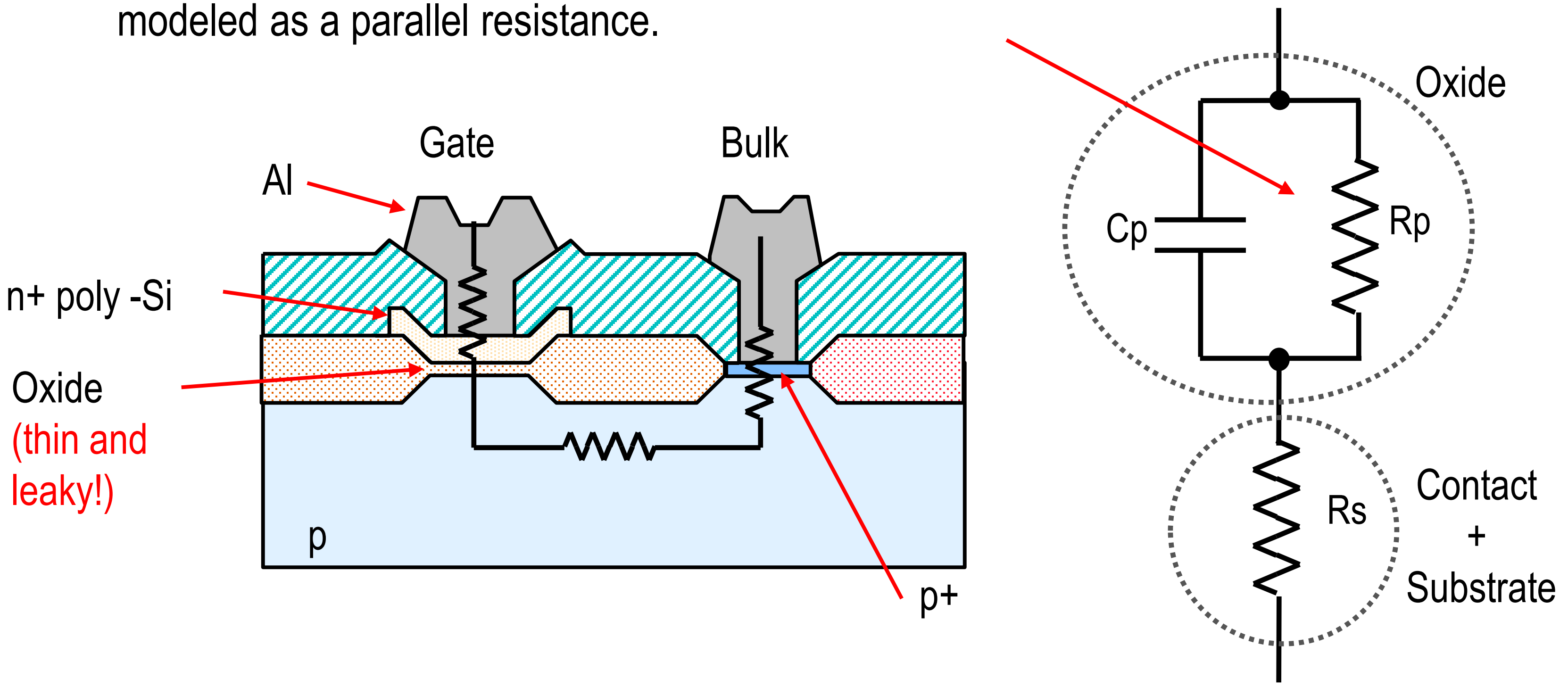

To measure the Cp we need to decrease its impedance relative to Rp (so that the majority of the measurement current flows through Cp). The only way to do this is to increase the frequency (possibly to as high as 100 MHz). This requires an impedance analyzer such as the 4294A or E4990A.

The Minimum Phase Method

This is the widely-accepted method for calculating thin gate dielectric device parameters.

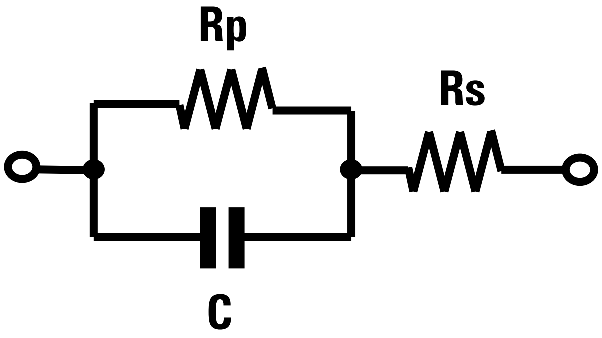

$$R_s = |Z_0| \frac{1 + \sin\theta_0}{\cos\theta_0}$$

$$R_p = -2|Z_0| \tan\theta_0$$

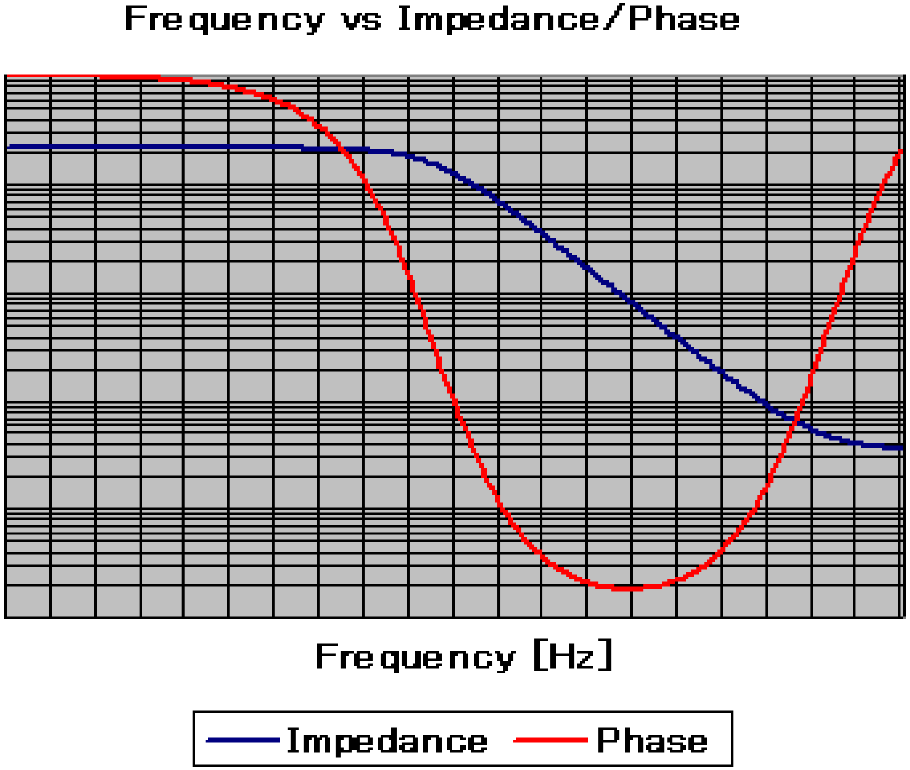

$$C = \frac{|Z_0|}{\omega_0 R_p R_s} = \frac{1}{4\pi f_0 |Z_0|} \left(\frac{\sin\theta_0 - 1}{\sin\theta_0} \right)$$

f_0: frequency at phase minimum
Zo: impedance at phase minimum

Thank You for Attending this Workshop!

Keysight U.S. Technical Contact Center: **1-800-829-4444**